FACTORY DIRECT

SALES EXCELLENT CRAFTSMANSHIP

厂家直营 精良工艺

◎站立储放360°旋转

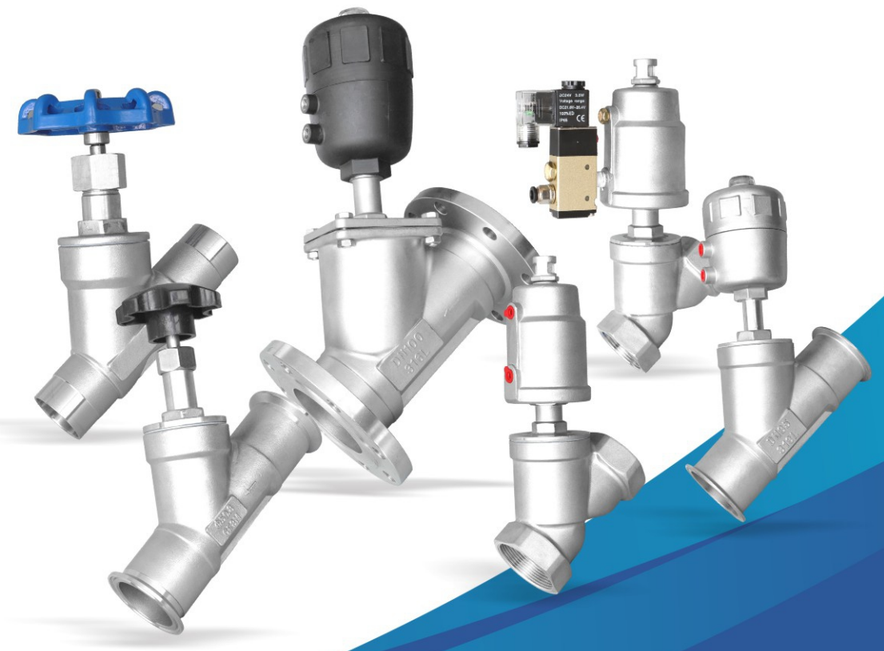

龙泸泉阀门科技

——厂家直营 精良工艺——

温州龙泸泉阀门科技有限公司

WENZHOU LONGHUQUAN VALVE TECHNOLOGY CO., LTD.

地址：浙江省温州市龙湾区滨海三路四道719号 四楼

电话：198 0577 1982 180 4234 2019

传真：0577-8986 2019

邮箱：766539288@qq.com

龙泸泉阀门科技

LONGHUQUAN VALVE TECHNOLOGY

龙泸泉

ABOUT US »
关于我们

温州市龙泸泉阀门科技有限公司，位于浙江省温州市龙湾经济开发区滨海园区，专注于研发制造、生产加工、销售和安装于一体的综合性企业，经验丰富，设备完善。

主导产品：

气动手动（角座阀、隔膜阀、球阀、蝶阀、截止阀）气动执行器、电动执行器，产品可根据用户需求加工定制。

公司坚持产品高品质，专业化，精细化，质量严格控制，完善，创新，用户至上，诚信经营。龙泸泉始终遵循：不仅产品做的更好，服务做的更好，工艺做的更好，确保龙泸泉产品在业界得到广大用户的认可，欢迎各界朋友位临参观、指导和业务洽谈。

Wenzhou Longhuquan Valve Technology Co., Ltd. is located in Binhai Park, Longwan Economic Development Zone, Wenzhou City, Zhejiang Province. It is a comprehensive enterprise focusing on R&D, manufacturing, production and processing, sales and installation, with rich experience and complete equipment.

Leading products:

Pneumatic manual (angle seat valve, diaphragm valve, ball valve, butterfly valve, globe valve)Pneumatic actuators, electric actuators, products can be customized according to user needs.

The company insists on high-quality products, specialization, refinement, strict quality control, perfection, innovation, customer first, and integrity management. Longhuquan always follows: Not only do the products better, the service is better, and the craftsmanship is better, to ensure that the products of Longhuquan are recognized by the majority of users in the industry. Friends from all walks of life are welcome to visit, guide and negotiate business.

« 6 ADVANTAGES
6大优势



« INTELLIGENT MANUFACTURING
智能智造

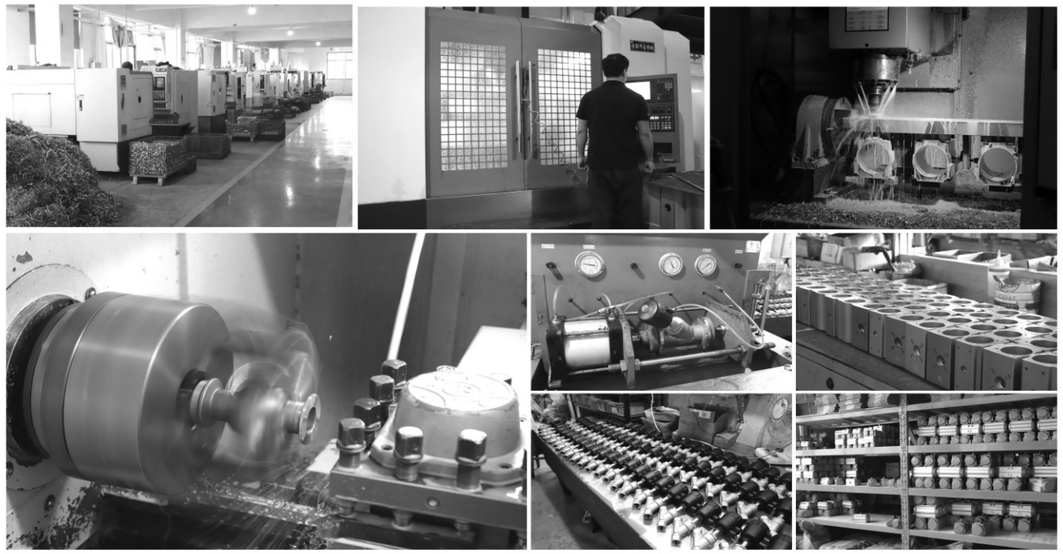

塑料头气动角座阀系列 »
Plastic Head Pneumatic Angle Seat Valve Series









全不锈钢头气动角座阀系列 »
All Stainless Steel Head Pneumatic Angle Seat Valve Series






盖米气动角座阀系列 »
Gemü Pneumatic Angle Seat Valve Series





手动角座阀系列 »
Manual Angle Seat Valve Series







龙泽泉阀门科技
LONGHUQUAN VALVE TECHNOLOGY

全不锈钢头气动角座阀系列 »
All Stainless Steel Head Pneumatic Angle Seat Valve Series





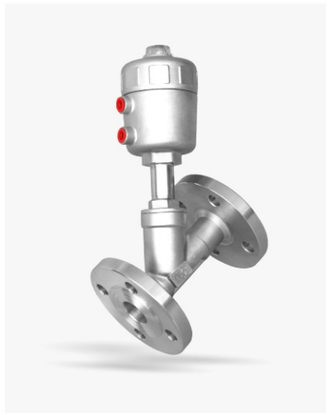

气动截止阀系列 »
Pneumatic Globe Valve Series





龙泽泉
LONGHUQUAN

LONG HUQUAN

« CONTENTS 目录

角座阀系列 ANGLE SEAT VALVE SERIES

角座阀介绍篇 Angle seat valve introduction ····· 01-02
管道和控制压力参数表 Pipeline And Control Pressure Parameter Table ····· 03-04
角座阀选型说明 Angle Seat Valve Selection Instructions ····· 05-06
塑料头气动法兰角座阀 Plastic Head Pneumatic Flange Angle Seat Valve ····· 07-08
塑料头气动快装角座阀 Plastic Head Pneumatic Quick-install Angle Seat Valve ····· 09
塑料头气动焊接角座阀 Plastic Head Pneumatic Welding Angle Seat Valve ····· 10
全不锈钢气动螺纹角座阀 All Stainless Steel Pneumatic Thread Angle Seat Valve ····· 11
全不锈钢气动法兰角座阀 All Stainless Steel Pneumatic Flange Angle Seat Valve ····· 12
全不锈钢气动快装角座阀 All Stainless Steel Pneumatic Quick-install Angle Seat Valve ····· 13
全不锈钢气动焊接角座阀 All Stainless Steel Pneumatic Welding Angle Seat Valve ····· 14

其它阀门系列 OTHER VALVE SERIES

T型气动螺纹截止阀 T-type Pneumatic Thread Globe Valve ····· 15
全不锈钢气动切断阀 All Stainless Steel Pneumatic Shut-off Valve ····· 16
气动灌装阀 Pneumatic Filling Valve ····· 17-18
1600系列智能电气阀门定位器 1600 Series Intelligent Electric Valve Positioner ····· 19
产品描述及应用 Product Description And Application ····· 20

隔膜阀系列 DIAPHRAGM VALVE SERIES

隔膜阀系列 Diaphragm valve series ····· 21-22
气动快装隔膜阀 Pneumatic quick-install diaphragm valve ····· 23
气动焊接隔膜阀 Pneumatic welding diaphragm valve ····· 24
手动快装隔膜阀 Manual quick-set diaphragm valve ····· 25
手动焊接隔膜阀 Manually welded diaphragm valve ····· 26
隔膜片 Diaphragm ····· 27-28

气动阀门系列 PNEUMATIC VALVE SERIES

气动球阀系列 Pneumatic ball valve series ····· 29-30
气动蝶阀系列 Pneumatic butterfly valve series ····· 31-32
气动执行器系列 Pneumatic actuator series ····· 33-38
气动高平台法兰球阀 Pneumatic high platform flange ball valve ····· 39
气动螺纹球阀 Pneumatic thread ball valve ····· 40
气动卫生级快装球阀 Pneumatic sanitary quick-install ball valve ····· 41
气动V型对夹球阀 Pneumatic V-shaped wafer ball valve ····· 42
气动对夹球阀 Pneumatic Wafer Ball Valve ····· 43
气动法兰蝶阀 Pneumatic flange butterfly valve ····· 44
气动卫生级快装蝶阀 Pneumatic sanitary quick-install butterfly valve ····· 45
气动三通球阀 Pneumatic three-way ball valve ····· 46

电动阀门系列 ELECTRIC VALVE SERIES

电动球阀系列 Electric ball valve series ····· 47
电动蝶阀系列 Electric butterfly valve series ····· 48
电动高平台法兰球阀 Electric high platform flange ball valve ····· 49
电动三片式螺纹球阀 Electric three-piece threaded ball valve ····· 50
电动卫生级快装球阀 Electric sanitary quick-install ball valve ····· 51
电动对夹蝶阀 Electric wafer butterfly valve ····· 52

LONG HUQUAN

角座阀介绍篇
Angle Seat Valve Introduction

一劳永逸
事实证明我们的角座阀工作寿命超过一百万次

50% more economical than ball valves
比球阀经济50%
600% longer service life than ball valves
比球阀工作寿命长6倍
Compact Design
精密的设计
Fast Response
反应敏捷
Water hammer-free
水击作用极小

易安装
Easy to install
汽控接口可在360°上
任意选定位置
Motor control interface on the 360 °
Any position can be choose

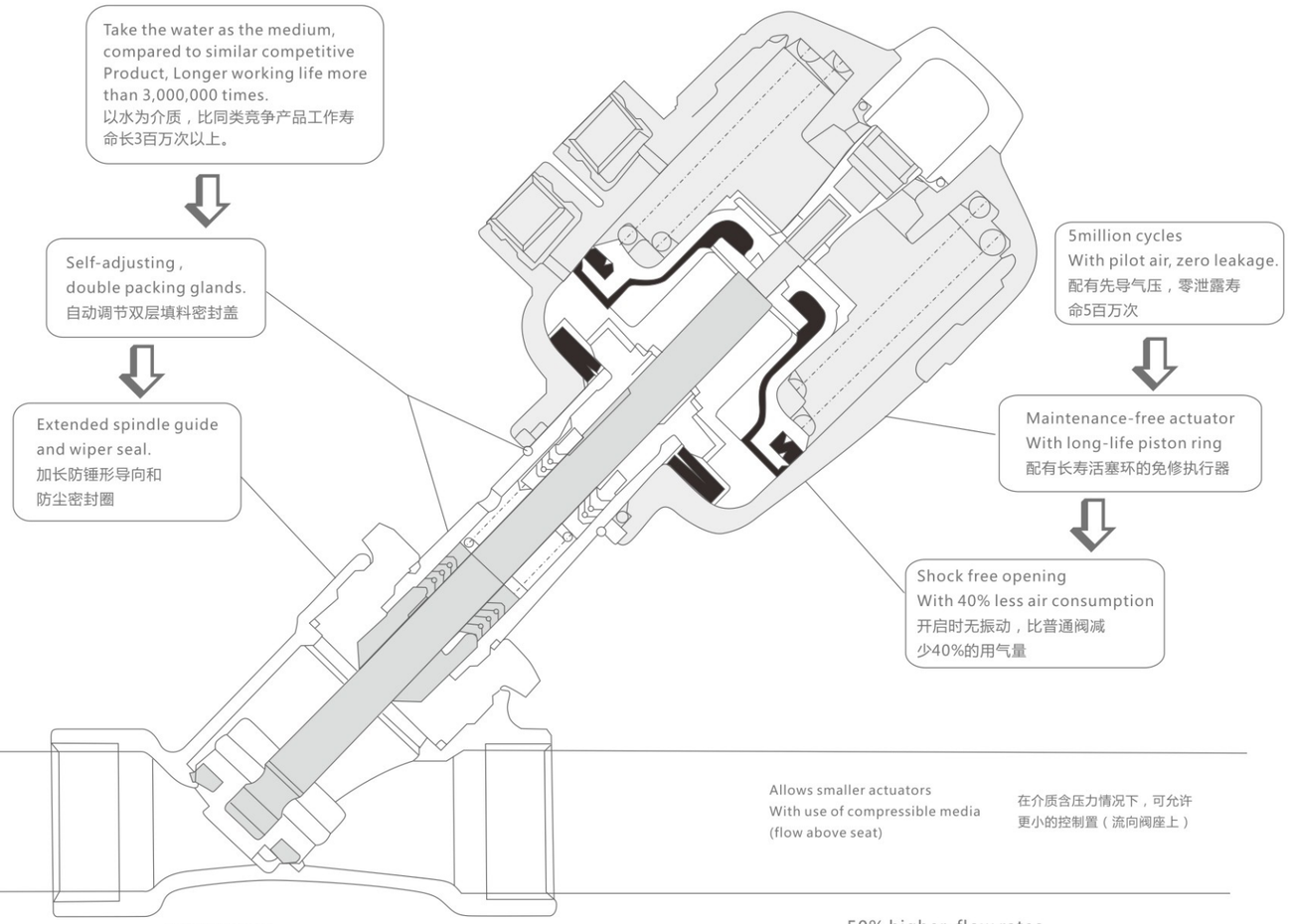

角座阀介绍篇
Angle Seat Valve Introduction

Once and for all
Facts have proved that our corner seat valve has a working life of more than a million times

食品和饮料流水线
Food and beverage
可控介质比如：空气，水，高达180℃蒸汽，碱性溶液和真空
Processing industries control of mediums such as air, water, steam up to 180℃, lye, vacuum

纺织印染和漂白
Textile dyeing and bleaching
可控水，高达180℃的蒸汽，苏打液
Control of water, steam up to 180℃
Corium hypochlorite

医院和制药工业消毒高压灭菌器
Sterilizers and auto-claves for hospitals and the pharmaceutical industry
可控蒸汽高达 180℃的水
Control of steam ,hot water up to 180℃

洗衣
Laundries
可控水，蒸汽，洗涤剂
Control of water, steam, washing agents

工业洗涤设备和溶解设备
Control of solvents, steam, vacuum

可控溶剂，蒸汽和真空
Industrial washing equipment and solvent recovery systems

机械制造
Machine tools
可控冷却液
Control of coolant agents

管道和控制压力参数表
Pipeline And Control Pressure Parameter Table

单作用常闭型（高进低出常规型）
Single-acting normally closed type
(High-in, low-out conventional type)

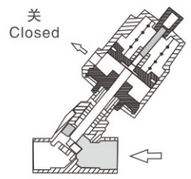

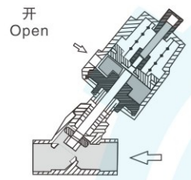

适用于可压缩性介质，例如气体，水蒸汽等；以及压力较低的液体介质。
Suitable for condensable medium, such as air, steam and low pressure liquid medium.

规格Size	接口 Thread	内孔 Orifice (mm)	流量值 Kv(m^3/h)	执行器 Actuator (mm)	压差范围 △P(MPa)	控制压力 Control pressure (Mpa)
DN10	G3/8"	13	3.8	50	0-1.6	0.4-0.7
DN15	G1/2"	13	4.7	50	0-1.6	0.4-0.7
				50	0-1.6	0.4-0.7
DN20	G3/4"	18	9.5	50	0-1.6	0.4-0.7
DN25	G1"	24	18.1	50	0-1.6	0.4-0.7
				63	0-1.6	0.4-0.7
DN32	G1 1/4"	32	23.1	63	0-1.6	0.4-0.7
				80	0-1.6	0.4-0.7
DN40	G1 1/2"	35	32.9	63	0-1.6	0.4-0.7
				80	0-1.6	0.4-0.7
DN50	G2"	45	52.8	63	0-1.2	0.4-0.7
				80	0-1.6	0.4-0.7
DN65	G2 1/2"	60	90	80	0-1.2	0.4-0.7
				100	0-1.6	0.4-0.7

单作用常闭型（低进高出防水锤型）
Single-acting normally closed type
(Low-in high-out waterproof hammer type)

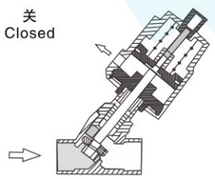

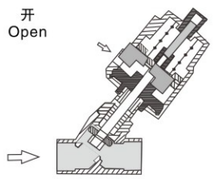

适用于防水锤管道，可承受一定压差。
Flow come from below seat, avoid water hammer

规格Size	接口 Thread	内孔 Orifice (mm)	流量值 Kv(m^3/h)	执行器 Actuator (mm)	压差范围 △P(MPa)	控制压力 Control pressure (Mpa)
DN10	G3/8"	13	3.8	50	0-1.4	0.6-0.8
DN15	G1/2"	13	4.7	50	0-1.1	0.6-0.8
				50	0-1.4	0.6-0.8
DN20	G3/4"	18	9.5	50	0-1.1	0.6-0.8
DN25	G1"	24	18.1	50	0-1.4	0.6-0.8
				63	0-1.4	0.6-0.8
DN32	G1 1/4"	32	23.1	80	0-1.6	0.6-0.8
				63	0-0.6	0.6-0.8
DN40	G1 1/2"	35	32.9	80	0-1.6	0.6-0.8
				63	0-0.5	0.6-0.8
DN50	G2"	45	52.8	80	0-1.6	0.6-0.8
				100	0-1.0	0.6-0.8
DN65	G2 1/2"	60	90	80	0-1.2	0.6-0.8
				100	0-1.6	0.6-0.8

管道和控制压力参数表
Pipeline And Control Pressure Parameter Table

双作用（高进低出常规型）
Double acting (High-in, low-out conventional type)

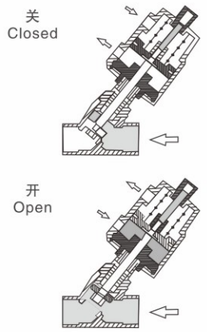

性能可靠，可承受较大压差；如果紧急情况，阀门可自动关闭。
Suitable for higher reliable performance, differential pressure △P; Valve could be closed if there is emergency.

规格Size	接口 Thread	内孔 Orifice(mm)	流量值 Kv(m^3/h)	执行器 Actuator(mm)	压差范围 △P(MPa)	控制压力 Control pressure (Mpa)
DN10	G3/8"	13	3.8	50	0-1.6	0.4-0.7
				50	0-1.6	0.4-0.7
DN15	G1/2"	13	4.7	50	0-1.6	0.4-0.7
				50	0-1.6	0.4-0.7
DN20	G3/4"	18	9.5	50	0-1.6	0.4-0.7
DN25	G1"	24	18.1	50	0-1.6	0.4-0.7
				63	0-1.6	0.4-0.7
DN32	G1 1/4"	32	23.1	63	0-1.6	0.4-0.7
				80	0-0.6	0.4-0.7
DN40	G1 1/2"	35	32.9	63	0-1.6	0.4-0.7
				80	0-1.6	0.4-0.7
DN50	G2"	45	52.8	63	0-1.2	0.4-0.7
				80	0-1.6	0.4-0.7
DN65	G2 1/2"	60	90	80	0-1.2	0.4-0.7
				100	0-1.6	0.4-0.7

双作用常闭型（低进高出防水锤型）
Double acting normally closed type
(Low entry high exit waterproof hammer type)

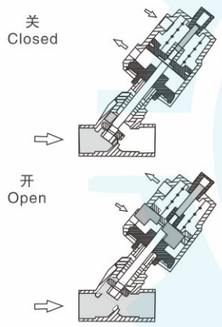

适用要求高的防水锤管道，可承受较大压差。
Flow come from below seat, avoid water hammer, suitable for higher △P.

规格Size	接口 Thread	内孔 Orifice(mm)	流量值 Kv(m^3/h)	执行器 Actuator(mm)	压差范围 △P(MPa)	控制压力 Control pressure (Mpa)
DN10	G3/8"	13	3.8	50	0-1.6	0.6-0.8
				50	0-1.6	0.6-0.8
DN15	G1/2"	13	4.7	50	0-1.6	0.6-0.8
				50	0-1.6	0.6-0.8
DN20	G3/4"	18	9.5	50	0-1.6	0.6-0.8
DN25	G1"	24	18.1	50	0-1.6	0.6-0.8
				63	0-1.6	0.6-0.8
DN32	G1 1/4"	32	23.1	63	0-1.6	0.6-0.8
				80	0-0.6	0.6-0.8
DN40	G1 1/2"	35	32.9	80	0-1.6	0.6-0.8
				100	0-1.6	0.6-0.8
DN50	G2"	45	52.8	80	0-0.8	0.6-0.8
				100	0-1.6	0.6-0.8
DN65	G2 1/2"	60	90	80	0-1.2	0.6-0.8
				100	0-1.6	0.6-0.8

单作用常开型（低进高出防水锤型）
Single-acting normally open type
(Low-in high-out waterproof hammer type)

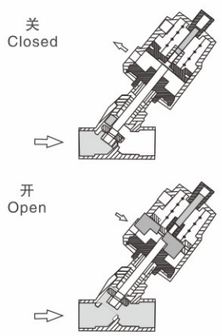

适用要求高的防水锤管道，可承受较大压差。
Flow come from below seat, avoid water hammer, suitable for higher △P.

规格Size	接口 Thread	内孔 Orifice(mm)	流量值 Kv(m^3/h)	执行器 Actuator(mm)	压差范围 △P(MPa)	控制压力 Control pressure (Mpa)
DN10	G3/8"	13	3.8	50	0-1.6	0.6-0.8
				50	0-1.6	0.6-0.8
DN15	G1/2"	13	4.7	50	0-1.6	0.6-0.8
				50	0-1.6	0.6-0.8
DN20	G3/4"	18	9.5	50	0-1.6	0.6-0.8
DN25	G1"	24	18.1	50	0-1.6	0.6-0.8
				63	0-1.6	0.6-0.8
DN32	G1 1/4"	32	23.1	63	0-1.6	0.6-0.8
				80	0-0.6	0.6-0.8
DN40	G1 1/2"	35	32.9	80	0-1.6	0.6-0.8
				100	0-1.6	0.6-0.8
DN50	G2"	45	52.8	80	0-0.8	0.6-0.8
				100	0-1.6	0.6-0.8
DN65	G2 1/2"	60	90	80	0-1.2	0.6-0.8
				100	0-1.6	0.6-0.8

角座阀选型说明
Angle Seat Valve Selection Instructions

气动角座阀可分为四种形态

PNEUMATIC ANGLE SEAT VALVE CAN BE DIVIDED INTO FOUR FORMS

第一种：单作用常闭型

工作原理：
根据弹簧复位达到阀门关闭的作用，工作时只需安装一跟气管，通气阀门打开，失气阀门自动关闭。在常压常温的情况下方便安装使用。

First: single-acting normally closed type

Working principle:
According to the spring return to achieve the function of closing the valve, only one air pipe needs to be installed during work, the vent valve is opened, and the lost gas valve is automatically closed. It is easy to install and use under normal pressure and normal temperature.

第二种：单作用常开型

工作原理：
根据通气关闭阀门，工作时只需安装一根气管，通气阀门关闭，失气阀门自动打开，在高温高压的情况，需要长期打开阀门的情况下可选用。

Second: single acting normally open type

Working principle:
According to the ventilation, the valve is closed. Only one air pipe is required to be installed during operation. The ventilation valve is closed and the lost gas valve is automatically opened. It can be used in the case of high temperature and high pressure and the need to open the valve for a long time.

第三种：双作用带弹簧关闭型 (推荐)

工作原理：
根据通气控制阀门开关，工作时需安装两根气管，遇紧急情况（列停电）阀门可自动关闭，用户还可与根据使用情况来自由安装阀门方向，（在恶劣条件下介质高温，高压，气缸压力小，防水锤等安装使用）控制更精确，更稳定。

Third: double acting with spring closing type (Recommend)

Working principle:
According to the ventilation control valve switch, two air pipes need to be installed during operation. In case of emergency (power outage), the valve can be automatically closed. The user can also freely install the valve according to the use situation. High pressure, low cylinder pressure, installation and use of waterproof hammer, etc.) control is more accurate and more stable.

第四种：双作用（自由态）

工作原理：
根据通气控制阀门开关，工作时需安装两根气管，在控制执行器压力较低的情况下使用，用户可根据使用情况打开阀门后属于常开状态。在低压低温的情况下使用双作用自由态可延长阀门寿命。

Fourth: Double acting (free state)

Working principle:
According to the ventilation control valve switch, two air pipes need to be installed during operation, and it is used when the pressure of the control actuator is low. The user can open the valve according to the use situation and belong to the normally open state. The double-acting free state can prolong the life of the valve under the condition of low pressure and low temperature.

角座阀选型说明
Angle Seat Valve Selection Instructions

气动角座阀、常规、执行器大小头选型

PNEUMATIC ANGLE SEAT VALVE, CONVENTIONAL, ACTUATOR SIZE HEAD SELECTION

大小头实物对比图
Comparison of size and size



例：

DN50单作用常规配63的执行器

常闭型执行器最低控制压力为0.4Mpa，在介质压力高于控制压力，
控制压力且只有0.4Mpa的情况下阀门有打不开的现象，这种情况选用大头，加大执行器到80，以及100，常开型在防水锤安装下，介质压力高于执行器控制压力，需要采用大头，加大执行器。具体非常规安装联系我们根据实际管道介质压力、温度以及压力控制选型。

根据用户要求可配备附件：电磁阀，限位开关，减压阀过滤器，接近开关，信号反馈，定位器等，所有规格，均可根据用户使用定制，必要时可派专业人士，现场设计以及安装。

角座阀保持流速能够节省空间，采用弹簧安全保护的单作用执行器机构来操作的导向角座阀，可广泛应用于短时间频繁启动，具有反应灵敏，动作准确的特点，配合电磁阀使用，用气动控制可准确控制气体，液体流量，可实现准确控温，滴加液体等要求，温热灭菌应用角座阀控制汽量准确控温。

Example:

DN50 single-acting conventional actuator with 63

The minimum control pressure of the normally closed actuator is 0.4Mpa. When the medium pressure is higher than the control pressure and the control pressure is only 0.4 Mpa, the valve will not open. In this case, use a large head and increase the actuator to 80. And 100, normally open type, under the installation of the waterproof hammer, the medium pressure is higher than the control pressure of the actuator, you need to use a large head to increase the actuator. For specific unconventional installation, contact us to select the model according to the actual pipeline medium pressure, temperature and pressure control.

According to user requirements can be equipped with accessories: solenoid valve, limit switch, pressure reducing valve filter, proximity switch, signal feedback, positioner, etc., all specifications can be customized according to user use, if necessary, can send professionals, site design and installation.

The angle seat valve maintains the flow rate and saves space. The pilot angle seat valve operated by a spring-actuated single-acting actuator mechanism can be widely used in short-time and frequent start-up. Pneumatic control can accurately control the flow of gas and liquid, and can achieve accurate temperature control, drop liquid addition and other requirements. Warm sterilization uses angle seat valve to control steam volume to accurately control temperature.

JZFAS-16P/R

塑料头气动螺纹角座阀

Plastic Head Pneumatic Thread Angle Seat Valve



技术参数

介质温度：-20℃～+180℃
环境温度:-20℃～+60℃
公称压力:1.6MPa
控制气体：中性气体，空气
气源压力：0.3~0.8MPa
规格：DN10-DN100
阀体材质：CF8/CF8M
阀座材质：PTFE
阀杆材质：304/316L
密封圈材质：NBR

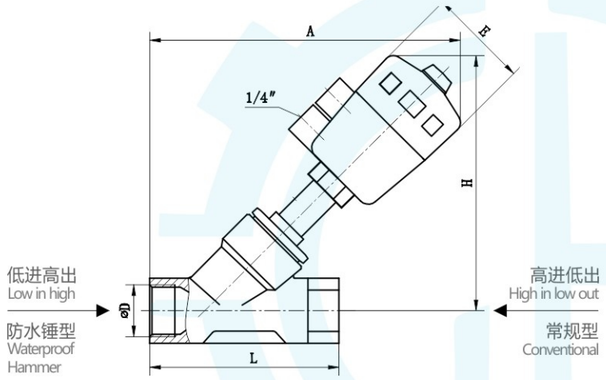

Technical parameters

Medium temperature: - 20 °C ~ + 180 °C
Ambient temperature: - 20 °C ~ + 60 °C
Nominal pressure: 1.6 MPa
Control gas, gas, air
Air pressure: 0.3 ~ 0.8 MPa
Specification: DN10 - DN100
The valve body material: CF8/CF8M
seat material:PTFE
Stem material: 304/316L
Sealing ring material: NBR

螺纹标准：英制圆锥管BSPT，可根据用户要求定制BSP,NPT等标准。
Thread standard: British conical tube BSPT, BSP, NPT and other standards can be customized according to user requirements.

型 号 model	L	A	H	D	E	常规型执行器 Conventional actuator	防水锤 Waterproof hammer	A	H
DN8/DN10	65	160	140	3/8"	64	Φ50	Φ50	160	140
DN15	85	175	145	1/2"	64	Φ50	Φ50	175	145
DN20	95	180	150	3/4"	64	Φ50	Φ50	180	150
DN25	105	185/210	160/180	1"	64/80	Φ50/Φ63	Φ63	210	180
DN32	120	215	185	11/4"	80	Φ63	Φ80	240	205
DN40	130	220	190	11/2"	80	Φ63	Φ80	245	210
DN50	150	235/250	200/220	2"	80/100	Φ63/Φ80	Φ100	300	270
DN65	185	285	250	21/2"	100	Φ80	Φ100	330	300
DN80	210	370	310	3"	126	Φ100	Φ125	410	350
DN100	235	420	395	4"	126	Φ125	Φ125	460	430

JZFAF-16P/R

塑料头气动法兰角座阀

Plastic Head Pneumatic Flange Angle Seat Valve



技术参数

介质温度：-20℃～+180℃
环境温度:-20℃～+60℃
公称压力:1.6MPa
控制气体：中性气体，空气
气源压力：0.3~0.8MPa
规格：DN15-DN125
阀体材质：CF8/CF8M
阀座材质：PTFE
阀杆材质：304/316L
密封圈材质：NBR

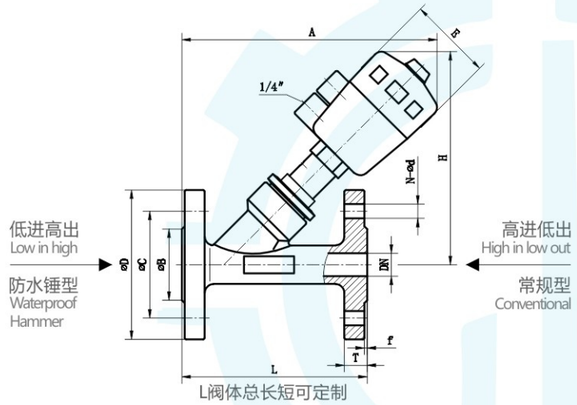

L阀体总长短可定制

Technical parameters

Medium temperature: - 20 °C ~ + 180 °C
Ambient temperature: - 20 °C ~ + 60 °C
Nominal pressure: 1.6 MPa
Control gas, gas, air
Air pressure: 0.3 ~ 0.8 MPa
Specification: DN15-DN125
The valve body material: CF8/CF8M
seat material:PTFE
Stem material: 304/316L
Sealing ring material: NBR

法兰标准：HG5010-58/PN10/PN16，可根据用户定制PN25,GB/T9113,HG20593,ISO,DIN,JIS等标准。
Flange standard: HG5010-58 / PN10 / PN16, Can be customized according to user PN25, GB/T9113, HG20593, ISO, DIN, JIS and other standards.

型 号 model	L	T	f	D	C	B	A	H	E	N–Φd	执行器 Actuator	防水锤 Waterproof hammer
DN15	130	14	2	95	65	40	185	160	64	4-Φ14	Φ50	Φ50
DN20	130	14	2	105	75	50	185	160	64	4-Φ14	Φ50	Φ50
DN25	140	14	2	115	85	60	200/230	170/205	64/80	4-Φ14	Φ50/Φ63	Φ63
DN32	150	16	2	135	100	70	240	210	80	4-Φ18	Φ63	Φ80
DN40	180	16	2	145	110	80	250	215	80	4-Φ18	Φ63	Φ80
DN50	195	16	2	160	125	92	260/280	220/230	80/100	4-Φ18	Φ63/Φ80	Φ100
DN65	230	18	2	185	145	115	300	270	100	4-Φ18	Φ80	Φ100
DN80	250	18	2	195	160	130	360	310	126	8-Φ18	Φ100	Φ125
DN100	300	18	2	215	180	150	380	330	126	8-Φ18	Φ100	Φ125

JZFAK-16P/R

塑料头气动快装角座阀

Plastic Head Pneumatic Quick-install Angle Seat Valve



技术参数

介质温度：-20℃～+180℃
环境温度:-20℃～+60℃
公称压力:1.6MPa
控制气体：中性气体，空气
气源压力：0.3~0.8MPa
规格：DN15-DN80
阀体材质：CF8/CF8M
阀座材质：PTFE
阀杆材质：304/316L
密封圈材质：NBR

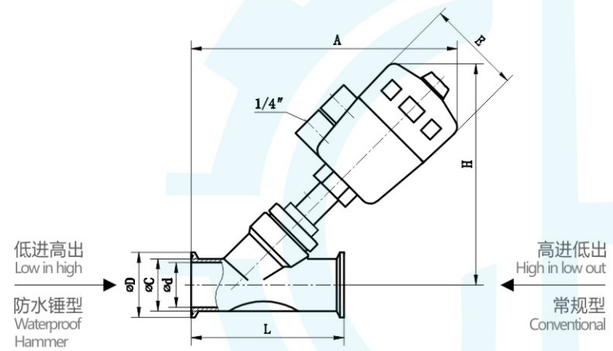

Technical parameters

Medium temperature: - 20 ℃ ~ + 180 ℃
Ambient temperature: - 20 ℃ ~ + 60 ℃
Nominal pressure: 1.6 MPa
Control gas, gas, air
Air pressure: 0.3 ~ 0.8 MPa
Specification: DN15-DN80
The valve body material: CF8/CF8M
seat material:PTFE
Stem material: 304/316L
Sealing ring material: NBR

快装接头可根据用户要求订制。
Quick connector can be customized according to user requirements

型 号 model	L	d	C	D	A	H	E	执行器 Actuator	防水锤 Waterproof hammer
DN15 /Φ19	130	16	20	50.5	180	160	64	Φ50	Φ50
DN20 /Φ25	130	21	25	50.5	185	160	64	Φ50	Φ50
DN25 /Φ32	140	26	31	50.5	200/230	170/205	64/80	Φ50/Φ63	Φ63
DN32 /Φ38	150	33	39	50.5	240	210	80	Φ63	Φ80
DN40 /Φ45	180	41	46	64	250	215	80	Φ63	Φ80
DN40 /Φ51	180	46	52	64	250	215	80	Φ63	Φ80
DN50 /Φ57	195	50	55	64	260/280	220/230	80/100	Φ63/Φ80	Φ100
DN50 /Φ63	195	58	64	77.5	285	235	100	Φ80	Φ100
DN65 /Φ76	230	70	77	91	320	270	100	Φ80	Φ100
DN80 /Φ89	250	83	90	106	360	310	126	Φ100	Φ125

JZFAH-16P/R

塑料头气动焊接角座阀

Plastic Head Pneumatic Welding Angle Seat Valve



技术参数

介质温度：-20℃～+180℃
环境温度:-20℃～+60℃
公称压力:1.6MPa
控制气体：中性气体，空气
气源压力：0.3~0.8MPa
规格：DN10-DN100
阀体材质：CF8/CF8M
阀座材质：PTFE
阀杆材质：304/316L
密封圈材质：NBR

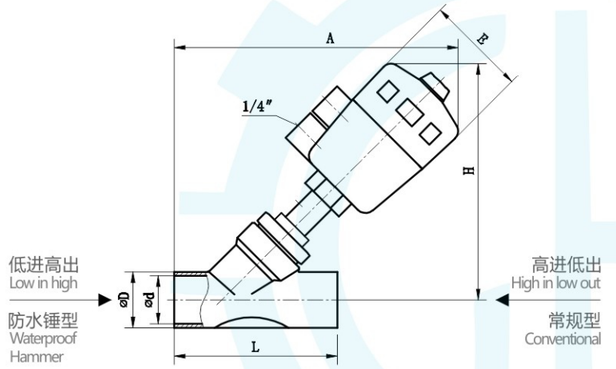

Technical parameters

Medium temperature: - 20 ℃ ~ + 180 ℃
Ambient temperature: - 20 ℃ ~ + 60 ℃
Nominal pressure: 1.6 MPa
Control gas, gas, air
Air pressure: 0.3 ~ 0.8 MPa
Specification: DN10 - DN100
The valve body material: CF8/CF8M
seat material:PTFE
Stem material: 304/316L
Sealing ring material: NBR

焊接尺寸可根据用户要求定制：外径，内径，阀体长度。
Welding size can be customized according to user requirements: outer diameter, inner diameter, valve body length

型 号 model	卫生管 Health tube	L	d	D	A	H	E	执行器 Actuator	防水锤 Waterproof hammer
DN10 /Φ13	12.7	120	10	14	180	155	64	Φ50	Φ50
DN15 /Φ19	19.05	130	15	20	185	160	64	Φ50	Φ50
DN20 /Φ25	25.4	130	20	26	185	160	64	Φ50	Φ50
DN25 /Φ32	31.8	140	26	33	200/230	170/275	64/80	Φ50/Φ63	Φ63
DN32 /Φ38	38.1	150	33	39	240	210	80	Φ63	Φ80
DN40 /Φ45	45	180	40	47	250	215	80	Φ63	Φ80
DN40 /Φ51	50.8	180	46	52	250	215	80	Φ63	Φ80
DN50 /Φ57	57	195	50	58	260/280	220/230	80/100	Φ63/Φ80	Φ100
DN50 /Φ63	63.5	195	58	64	285	235	100	Φ80	Φ100
DN65 /Φ76	76.1	230	68	78	320	270	100	Φ80	Φ100
DN80 /Φ89	88.9	250	83	92	360	310	126	Φ100	Φ125
DN100/Φ108	108	300	101	112	380	330	126	Φ100	Φ125

JZFCS-16P/R

全不锈钢气动螺纹角座阀

All Stainless Steel Pneumatic Thread Angle Seat Valve



技术参数

介质温度：-20℃～+180℃
环境温度:-20℃～+60℃
公称压力:1.6MPa
控制气体：中性气体，空气
气源压力：0.3~0.8MPa
规格：DN15-DN100
阀体材质：CF8/CF8M
阀座材质：PTFE
阀杆材质：304/316L
密封圈材质：NBR

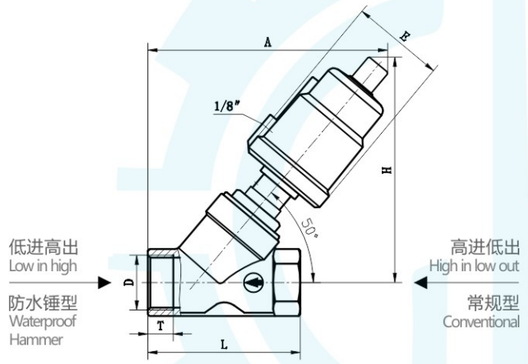

Technical parameters

Medium temperature: - 20 °C ~ + 180 °C
Ambient temperature: - 20 °C ~ + 60 °C
Nominal pressure: 1.6 MPa
Control gas, gas, air
Air pressure: 0.3 ~ 0.8 MPa
Specification: DN15 - DN100
The valve body material: CF8/CF8M
seat material:PTFE
Stem material: 304/316L
Sealing ring material: NBR

螺纹标准：英制圆锥管BSPT，可根据用户要求定制BSP,NPT等标准。
Thread standard: British conical tube BSPT, BSP, NPT and other standards can be customized according to user requirements.

型 号 model	L	T	A	H	D	E	执行器 Actuator	防水锤 Waterproof hammer
DN15	68	11	135	135	1/2"	62	Φ50	Φ50
DN20	75	14	140	140	3/4"	62	Φ50	Φ50
DN25	90	15	145	145	1"	62	Φ50	Φ63
DN32	115	17.5	195	180	1 1/4"	76	Φ63	Φ80
DN40	115	17.5	195	180	1 1/2"	76	Φ63	Φ80
DN50	135	20	215	200	2"	76	Φ63	Φ100
DN65	185	30	285	250	2 1/2"	96	Φ80	Φ100
DN80	210	33	370	310	3"	114	Φ100	Φ100
DN100	235	33	420	395	4"	114	Φ100	Φ150

JZFCF-16P/R

全不锈钢气动法兰角座阀

All Stainless Steel Pneumatic Flange Angle Seat Valve



技术参数

介质温度：-20℃～+180℃
环境温度:-20℃～+60℃
公称压力:1.6MPa
控制气体：中性气体，空气
气源压力：0.3~0.8MPa
规格：DN15-DN100
阀体材质：CF8/CF8M
阀座材质：PTFE
阀杆材质：304/316L
密封圈材质：NBR

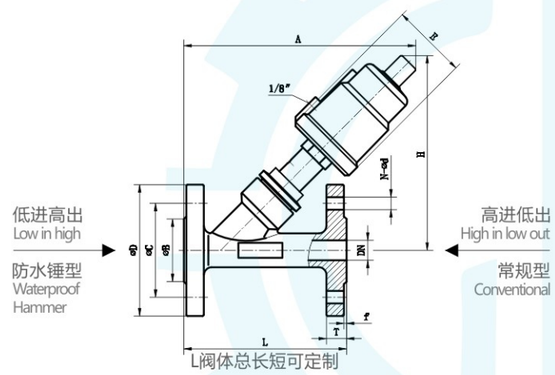

Technical parameters

Medium temperature: - 20 °C ~ + 180 °C
Ambient temperature: - 20 °C ~ + 60 °C
Nominal pressure: 1.6 MPa
Control gas, gas, air
Air pressure: 0.3 ~ 0.8 MPa
Specification: DN15 - DN100
The valve body material: CF8/CF8M
seat material:PTFE
Stem material: 304/316L
Sealing ring material: NBR

法兰标准：HG5010-58/PN10/PN16，可根据用户定制PN25,GB/T9113,HG20593,ISO,DIN,JIS等标准。
Flange standard: HG5010-58 / PN10 / PN16, can be customized according to user PN25, GB / T9113, HG20593, ISO, DIN, JIS and other standards.

型 号 model	L	T	f	D	C	B	A	H	E	N–Φd	执行器 Actuator	防水锤 Waterproof hammer
DN15	130	14	2	95	65	40	185	155	62	4-Φ14	Φ50	Φ50
DN20	130	14	2	105	75	50	185	155	62	4-Φ14	Φ50	Φ50
DN25	140	14	2	115	85	60	210	165	62	4-Φ14	Φ50	Φ63
DN32	150	16	2	135	100	70	225	195	76	4-Φ18	Φ63	Φ80
DN40	180	16	2	145	110	80	240	205	76	4-Φ18	Φ63	Φ80
DN50	195	16	2	160	125	92	265	230	76	4-Φ18	Φ63	Φ100
DN65	230	18	2	185	145	115	290	265	96	4-Φ18	Φ80	Φ100
DN80	250	18	2	195	160	130	330	300	114	8-Φ18	Φ100	Φ100
DN100	300	18	2	215	180	150	350	320	114	8-Φ18	Φ100	Φ150

JZFCK-16P/R

全不锈钢气动快装角座阀

All Stainless Steel Pneumatic Quick-install Angle Seat Valve



技术参数

介质温度：-20℃～+180℃
环境温度:-20℃～+60℃
公称压力:1.6MPa
控制气体：中性气体，空气
气源压力：0.3~0.8MPa
规格：DN15-DN80
阀体材质：CF8/CF8M
阀座材质：PTFE
阀杆材质：304/316L
密封圈材质：NBR

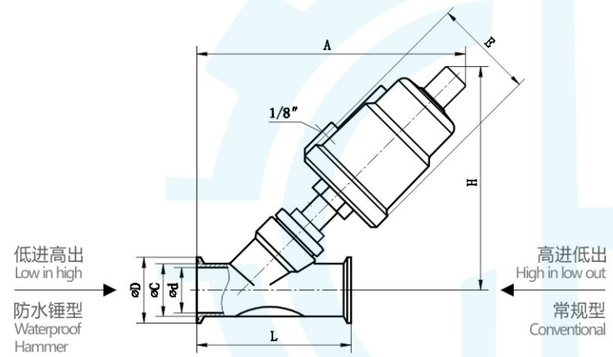

Technical parameters

Medium temperature: - 20 °C ~ + 180 °C
Ambient temperature: - 20 °C ~ + 60 °C
Nominal pressure: 1.6 MPa
Control gas, gas, air
Air pressure: 0.3 ~ 0.8 MPa
Specification: DN15-DN80
The valve body material: CF8/CF8M
seat material:PTFE
Stem material: 304/316L
Sealing ring material: NBR

快装接头可根据用户要求定制。
Quick connector can be customized according to user requirements.

型 号 model	L	d	C	D	A	H	E	执行器 Actuator	防水锤 Waterproof hammer
DN15 /Φ19	130	16	20	50.5	180	160	62	Φ50	Φ50
DN20 /Φ25	130	21	25	50.5	185	160	62	Φ50	Φ50
DN25 /Φ32	140	26	31	50.5	200/230	170/205	62	Φ50/Φ63	Φ63
DN32 /Φ38	150	33	39	50.5	240	210	76	Φ63	Φ80
DN40 /Φ45	180	41	46	64	250	215	76	Φ63	Φ80
DN40 /Φ51	180	46	52	64	250	215	76	Φ63	Φ80
DN50 /Φ57	195	50	55	64	260/280	220/230	76	Φ63/Φ80	Φ100
DN50 /Φ63	195	58	64	77.5	285	235	96	Φ80	Φ100
DN65 /Φ76	230	70	77	91	320	270	96	Φ80	Φ100
DN80 /Φ89	250	83	90	106	360	310	96	Φ100	Φ125

JZFCH-16P/R

全不锈钢气动焊接角座阀

All Stainless Steel Pneumatic Welding Angle Seat Valve



技术参数

介质温度：-20℃～+180℃
环境温度:-20℃～+60℃
公称压力:1.6MPa
控制气体：中性气体，空气
气源压力：0.3~0.8MPa
规格：DN15-DN100
阀体材质：CF8/CF8M
阀座材质：PTFE
阀杆材质：304/316L
密封圈材质：NBR

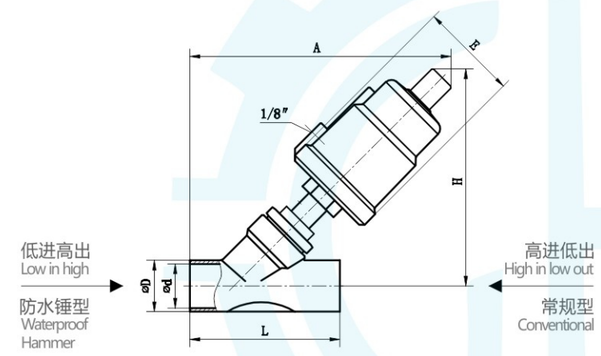

Technical parameters

Medium temperature: - 20 °C ~ + 180 °C
Ambient temperature: - 20 °C ~ + 60 °C
Nominal pressure: 1.6 MPa
Control gas, gas, air
Air pressure: 0.3 ~ 0.8 MPa
Specification: DN15 - DN100
The valve body material: CF8/CF8M
seat material:PTFE
Stem material: 304/316L
Sealing ring material: NBR

焊接尺寸可根据用户要求定制：外径，内径，阀体长度。
Welding size can be customized according to user requirements: outer diameter, inner diameter, valve body length.

型 号 model	卫生管 Health tube	L	d	D	A	H	E	执行器 Actuator	防水锤 Waterproof hammer
DN10 /Φ13	12.7	120	10	14	180	155	62	Φ50	Φ50
DN15 /Φ19	19.05	130	15	20	185	160	62	Φ50	Φ50
DN20 /Φ25	25.4	130	20	26	185	160	62	Φ50	Φ50
DN25 /Φ32	31.8	140	26	33	200/230	170/275	62	Φ50/Φ63	Φ63
DN32 /Φ38	38.1	150	33	39	240	210	76	Φ63	Φ80
DN40 /Φ45	45	180	40	47	250	215	76	Φ63	Φ80
DN40 /Φ51	50.8	180	46	52	250	215	76	Φ63	Φ80
DN50 /Φ57	57	195	50	58	260/280	220/230	76	Φ63/Φ80	Φ100
DN50 /Φ63	63.5	195	58	64	285	235	96	Φ80	Φ100
DN65 /Φ76	76.1	230	68	78	320	270	96	Φ80	Φ100
DN80 /Φ89	88.9	250	83	92	360	310	114	Φ100	Φ125
DN100/Φ108	108	300	101	112	380	330	114	Φ100	Φ125

TXFS-16P/R

T型气动螺纹截止阀

T-type Pneumatic Thread Globe Valve



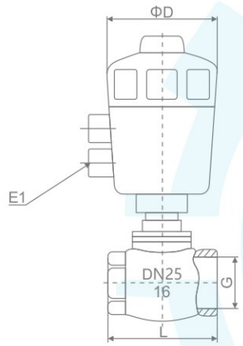

腰鼓行切断阀DN50-100
Waist drum cut-off valve DN50-100

特点

1、结构紧凑、重量轻、流量大、成本低；
2、使用寿命是薄膜型切断阀的10倍；
3、气管接口可360°旋转、阀头可拆卸；
4、免维护密封(进口密封圈)
控制功能：(双向或单向)可选类型：常开型、常闭型
控制压力：0.2-0.5MPa
介质温度：-10℃~220℃
环境温度：-10℃~80℃
体制气体：中性气体、空气

适用范围

可替代薄膜型切断阀、气体、干燥设备、石油化工、水处理、染整、泡塑机械等。

Features

1. Compact structure, light weight, large flow, low cost;
2. The service life is 10 times that of the membrane type cut-off valve;
3. The trachea interface can be rotated 360 ° and the valve head can be removed
4. Maintenance-free seal (imported sealing ring)
Control function: (bidirectional or unidirectional)
Optional types: normally open, normally closed
Control pressure: 0.2-0.5MPa
Medium temperature: -10 ℃ ~ 220 ℃
Ambient temperature: -10 ℃ ~ 80 ℃
Institutional gas: neutral gas, air

Scope of application

It can replace film-type cut-off valves, gas, drying equipment, petrochemical industry, water treatment, dyeing and finishing, foam molding machinery, etc.

主要外形连接尺寸
Main external dimensions

丝扣式内孔 Threaded inner bore DN	执行机构尺寸 Actuator size ΦD(mm)	阀体长度 Body length L(mm)	Kv值 value (m^3/n)	最高温度下管道压力 Pipe pressure at highest temperature	先导压力 Pilot pressure	控制压力 Control pressure	流向 Flow
DN15	Φ50	54	3.9	180°≤16bar	3	2.5-5	阀座下方 Underseat
DN20	Φ50	63	7.5	180°≤16bar	3	2.5-5	阀座下方 Underseat
DN25	Φ50	75	17	180°≤16bar	3	2.5-5	阀座下方 Underseat
DN32	Φ63	85	25	180°≤16bar	3.5	2.5-5	阀座下方 Underseat
DN40	Φ63	99	40	180°≤16bar	3.5	2.5-5	阀座下方 Underseat
DN50	Φ63	114	50	180°≤16bar	4	2.5-5	阀座下方 Underseat
DN65	Φ80	129	65	180°≤16bar	4	2.5-5	阀座下方 Underseat
DN80	Φ100	200	110	180°≤16bar	4	2.5-5	阀座下方 Underseat
DN100	Φ100	230	135	180°≤16bar	4	2.5-5	阀座下方 Underseat

Q22HD

全不锈钢气动切断阀

All Stainless Steel Pneumatic Shut-off Valve



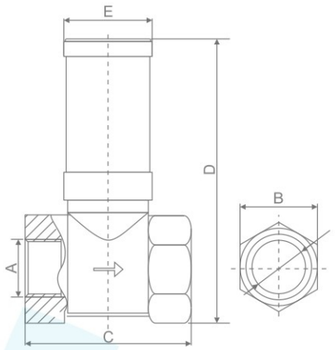

技术参数 Technical Data

阀体/执行器材质 Body / actuator material	阀体、连接件和执行器为不锈钢材质 The valve body, connectors and actuators are made of stainless steel						
运动方式 Movement way	活塞直动式 Piston direct acting						
介质 Medium	空气，水，油，蒸汽，以及任何中性气体 Air, water, oil, steam, and any neutral gas						
接管口径 Pipe diameter	G1/2"	G3/4"	G1"	G1-1/4"	G1-1/2"	G2"	G2-1/2"
通径 Size	13	16	22	32	35	45	55
Kv (m^3/h)	4	5	10	20	25	40	50
使用压力范围MPa Use pressure range MPa	0~0.8	0~0.8	0~0.8	0~0.8	0~0.8	0~0.8	0~0.8
最小控制压力MPa Minimum control pressure MPa	0.30	0.30	0.32	0.30	0.35	0.32	0.35
媒介温度 The medium temperature	NBR (-10~80℃)			EPDM, VITON (-10~150℃)			

主要外形连接尺寸
Main external dimensions

接管口径 Pipe diameter	DN (mm)	执行器尺寸 Actuator size (mm)	A	B	C	D	E
1/2"	DN15	25	G1/2"	27	55	108	32
3/4"	DN20	32	G3/4"	33	65	112	32
1"	DN25	32	G1"	42	75	136	38
1-1/4"	DN32	40	G1-1/4"	49	85	156	55
1-1/2"	DN40	50	G1-1/2"	57	99	167	55
2"	DN50	63	G2"	68	115	192	68
2-1/2"	DN65	80	G2-1/2"	87	129	235	80

GZFA-16P
气动灌装阀
Pneumatic Filling Valve

GZFA-16P



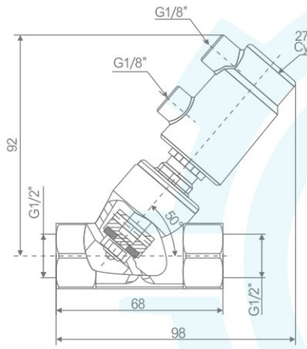

DN15灌装阀-A
DN15 Filling valve-A

GZFB-16P



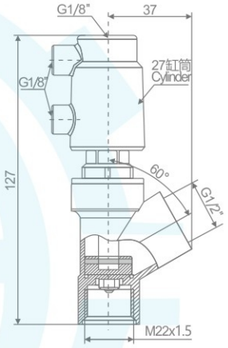

DN15立式灌装阀-B
DN15 vertical filling valve-B

特点
本阀门采用精致型设计，各部件均采用不锈钢制造，外观精美，部件轻巧，结构紧凑，阀芯部位采用活动式结构，可自行校正，密封性能优良。

技术参数
控制形式：双作用常闭型，双作用自由态
双作用常闭型：管道压力0-0.7MPa
控制压力0.38-0.42MPa
双作用自由态：管道压力0-0.7MPa
控制压力0.3-0.35MPa
控制介质：经过滤的压缩空气
阀体材质：CF8或CF8M
密封材料：PTFE
介质温度：-10℃~+120℃
连接形式：螺纹式

Advantages
The valve adopts exquisite design, all parts are made of stainless steel, the appearance is exquisite, the parts are light, the structure is compact, the valve core part adopts the movable structure, which can be corrected by itself, and the sealing performance is excellent.

Technical Parameters
Control form: double acting normally closed type, double acting free state
Double acting normally closed type: pipeline pressure 0-0.7MPa,
control pressure 0.38-0.42MPa
Double acting free state: pipeline pressure 0-0.7MPa,
control pressure 0.3-0.35MPa
Control medium: filtered compressed air
Body material: CF8 or CF8M
Sealing material: PTFE
Medium temperature: -10℃ ~ + 120℃
Connection form: threaded

GZFA-16P
气动灌装阀
Pneumatic Filling Valve

GZFC-16P

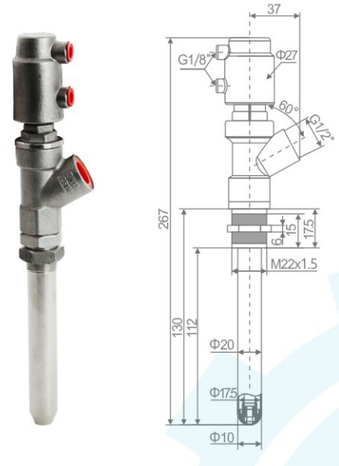

DN15加长型灌装阀-C
DN15 extended filling valve-C

GZFD-16P

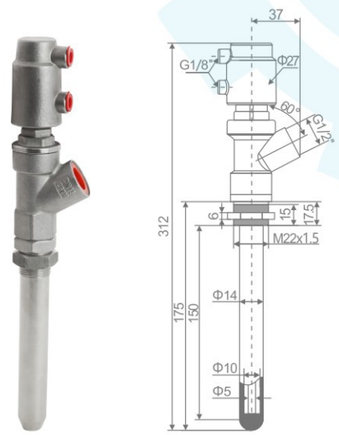

DN15加长型灌装阀-D
DN15 extended filling valve-D

特点
广泛应用于灌装机诫，
尤其适用于粘稠、膏状及容易起泡沫的液体灌装；
灌装速度快，精准稳定；
精致小巧，便于排管布局；
灌装头底部特殊的密封设计，
可以实现灌装无滴漏；
灌装头底部倒角结构，
具有导向定位作用，可下潜灌装。

技术参数
双作用常闭型：
管道压力：0-0.7MPa
控制压力：0.38-0.42MPa
双作用自由态：
管道压力：0-0.7MPa
控制压力：0.3-0.35MPa

阀体材质：CF8或CF8M
密封材料：PTFE
介质温度：-10℃~+120℃

Advantages
Widely used in filling machine commandments, Especially suitable for the filling of viscous, pasty and foamy liquids;Fast filling speed, accurate and stable; Exquisite and compact, easy to arrange the tube; Special sealing design at the bottom of the filling head, Can achieve filling without dripping;Chamfer structure at the bottom of the filling head,With guiding and positioning effect, it can be submerged in filling.

Technical Parameters
Double acting normally closed type:
Pipeline pressure: 0-0.7MPa
Control pressure: 0.38-0.42MPa
Double acting free state:
Pipeline pressure: 0-0.7MPa
Control pressure: 0.3-0.35MPa

Body material: CF8 or CF8M
Sealing material: PTFE
Medium temperature: -10℃ ~ +120℃

1600系列智能电气阀门定位器
1600 Series Intelligent Electric Valve Positioner

- 不锈钢外壳设计 • Stainless steel shell design
- 电气防水接头 • Electric waterproof joint
- 带背光液晶显示屏 • With backlit LCD screen
- 快速简易启动 • Quick and easy start
- 丰富的附加功能 • Rich additional functionality



概 述 An overview of the

1600系列智能电气阀门定位器是专为一体式气动调节阀所设计的，特别适用于角座阀和隔膜阀产品。该产品操作简便，软件功能丰富，可轻松通过液晶屏和按键面板进行操作。定位器可通过检测位移传感器信号，对阀位进行快速精确调节。

Series 1600 intelligent electrical valve positioner is designed for one - piece Pneumatic control valve design, especially suitable for Angle seat valve and Diaphragm valve products.This product is easy to operate and has rich software functions. Easy to operate through the LCD screen and key panel.setThe positioner can detect the displacement sensor signal and position the valveFast and accurate adjustment.

技 术 参 数 Technical parameters

材 料	聚碳酸脂（PC）硅橡胶(SI) 聚酰胺(PA6-GF30）不锈钢(304)
电源	直流24V ±10%
信号输入	0/4 to 20mA 或0 to 5/10 V
设定信号输入阻抗	0/4-20mA信号时240Ω 0-5/10V信号时 21KΩ
压缩空气要求 颗粒度要求 颗粒密度要求 凝点要求 油脂浓度要求	中性气体, 符合 DIN ISO 8573-1 要求 Class 5 (<40μm particle size) Class 5 (<10mg/m3) Cass 3 (<-20℃) Class 5 (<25mg/m3)
环境温度	0-55°C
	1/4英寸插入式软管接头(内径Φ6mm)
电气快速接头	M12 三针 B标准(电缆直径ø 4-6mm) M12 四针 D标准(电缆直径ø 4-6mm) M12 五针 A标准(电缆直径ø 4-6mm)
气源压力	3-7 bar，具体值视执行机构而定
气体输出流量	18 l/min，55 l/min(仅单作用)
阀门行程控制范围	直行程5-50 mm 角行程90°
安装方式	倾向于安装在执行器顶端， 通过M26螺纹和执行器连接
防护等级	Ip65
功耗	<5W

产品描述及应用
Product Description And Application



1600/JZFAS-16P/R
调节型气动螺纹角座阀
External regulation pneumatic thread Angle seat valve



1500/JZFCF-16P/R
调节型全不锈钢法兰角座阀
Adjustable all stainless steel flange angle seat valve

1600 系列智能电气阀门定位器是一款基于微处理器的阀门开度调节器。阀门开度可通过外部输入信号设定。

定位器运用自动控制算法和 PWM 控制技术，快速而准确地实现阀门的开度调节，从而来控制流体管路的流量。

1600 series intelligent electrical valve positioner is a microprocessor based valve opening regulator.Valve opening can be set by external input signal.The positioner USES automatic control algorithm and PWM control technology to quickly and accurately realize the valve opening adjustment, so as to control the flow of the fluid pipeline.

注：该产品可在密封空间中使用，并实现远程自动控制。它具有传输特性，安全位置，紧闭等多种辅助功能。同时它容易安装，操作和维护，并且故障率低。

Note: this product can be used in sealed space and realize remote automatic control.It has many auxiliary functions, such as transmission characteristic, safe position, close, etc.And it's easy to install, operate and maintain.And the failure rate is low.

DIAPHRAGM VALVE SERIES »
隔膜阀系列



PERFECTION, INNOVAT
CUSTOMER FIRST
完 善 创 新 用

隔膜阀系列
Diaphragm Valve Series

 G681F-10P/R 气动快装隔膜阀 Pneumatic fast loading diaphragm valve	 1500/G681F-10P/R 调节型气动快装隔膜阀 External regulation pneumatic fast loading diaphragm valve	 1600/G681F-10P/R 调节型气动快装隔膜阀 External regulation pneumatic fast loading diaphragm valve	 G681F-10P/R 全不锈钢气动快装隔膜阀 All stainless steel diaphragm valve pneumatic fast
 G685F-10P/R 气动三通快装隔膜阀 Pneumatic tee fast loading diaphragm valve	 G685F-10P/R 气动三通U型快装隔膜阀 Pneumatic tee U fast loading diaphragm valve	 G681F-10P/R 气动罐底阀 Pneumatic tank bottom valve	 G81F-10P/R 手动快装隔膜阀带取样阀 Fast loading diaphragm valve with sampling valve manually
 G81F-10P/R 手动快装隔膜阀 Fast loading diaphragm valve manually	 G85F-10P/R 手动三通隔膜阀 Manual three-way valve diaphragm	 G61F-10P/R 手动U型三通焊接隔膜阀 Manual u-shaped three-way welding diaphragm valve	 G81F-10P/R 手动罐底阀 Manual valve at the tank bottom

G681F-10R

气动快装隔膜阀

Pneumatic Quick-install Diaphragm Valve



技术参数

介质温度：-20℃～+150℃
环境温度:-20℃～+60℃
公称压力:0～1.0MPa
规格：DN15～DN50
控制气体：中性气体，空气
气源压力：0.3～0.8MPa
气缸材料：PA66
阀体材质：316L
膜片材质：EPDM EPDM+PTFE
阀杆材质:304
密封圈材质：NBR

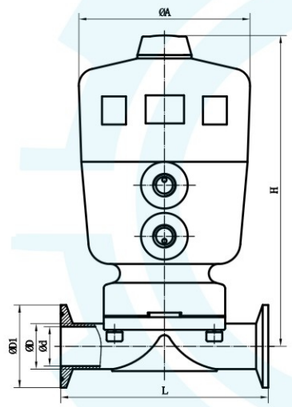

G681F-10R
气动快装隔膜阀

Technical parameters

Medium temperature: - 20 ℃ ～ + 150 ℃
Ambient temperature: - 20 ℃ ～ + 60 ℃
Nominal pressure: 0 ～ 1.0 MPa
Specification: DN15 ～DN50
Control gas, gas, air
Air pressure: 0.3 ～ 0.8 MPa
Cylinder material: PA66
The valve body material: 316 l
diaphragm material: EPDM EPDM +PTFE
Stem material: 304
Sealing ring material: NBR

型 号 model	L	d	D	D1	A	H	执行器 Actuator
Dn15	86	9.4	12.7	25.0	64	122	Φ50
DN20	108	15.8	19.1	25.0	80	167	Φ63
DN25	127	22.1	25.4	50.5	100	170	Φ80
DN32	146	28.5	31.8	50.5	100	175	Φ80
DN40	159	34.8	38.1	50.5	126	225	Φ100
DN50	190	47.5	50.8	64	126	238	Φ100

G661F-10R

气动焊接隔膜阀

Pneumatic Welding Diaphragm Valve



技术参数

介质温度：-20℃～+150℃
环境温度:-20℃～+60℃
公称压力:0～1.0MPa
控制气体：中性气体、空气
气源压力：0.3～0.8MPa
规格：DN10～DN50
气缸材料：PA增强/PPS-GF40
阀体材质：CF3M
膜片材质： EPDM+PTFE
阀杆材质:304
密封圈材质：NBR

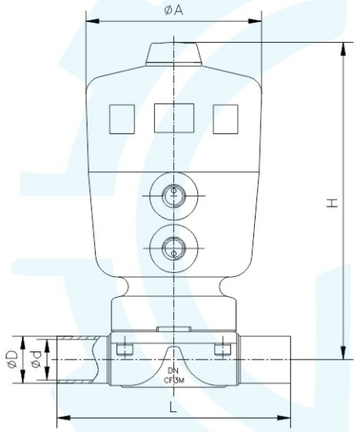

G661F-10R
气动焊接隔膜阀

Technical parameters

Medium temperature: - 20 ℃ ～ + 150 ℃
Ambient temperature: - 20 ℃ ～ + 60 ℃
Nominal pressure: 0 ～ 1.0 MPa
Control gas, gas, air
Air pressure: 0.3 ～ 0.8 MPa
Specification: DN10～DN50
Cylinder material: PA reinforced /PPS-GF40
Valve body material: CF3M
Diaphragm material: EPDM+PTFE
Stem material :304
Sealing ring material: NBR

NPS	DN	L	A	H	d	D	执行器 Actuator
3/8"	DN10	86	64	122	7.8	9.5	Φ50
1/2"	DN15	86	80	145	9.4	12.7	Φ63
3/4"	DN20	108	100	167	15.8	19.1	Φ80
1"	DN25	127	100	177	22.1	25.4	Φ80
1 1/4"	DN32	146	100	180	28.5	31.8	Φ80
1 1/2"	DN40	159	126	225	34.8	38.1	Φ100
2"	DN50	190	126	238	47.5	50.8	Φ100

G81X/F-10R

手动快装隔膜阀

Manual Quick-set Diaphragm Valve



技术参数

介质温度：-20℃～+150℃
环境温度:-20℃～+60℃
公称压力:0~1.0MPa
规格：DN8~DN80
手轮材料：PA66/304
阀体材质：316L
膜片材质：EPDM EPDM+PTFE
阀杆材质:2Cr13（电解）
螺钉、螺母材质：304

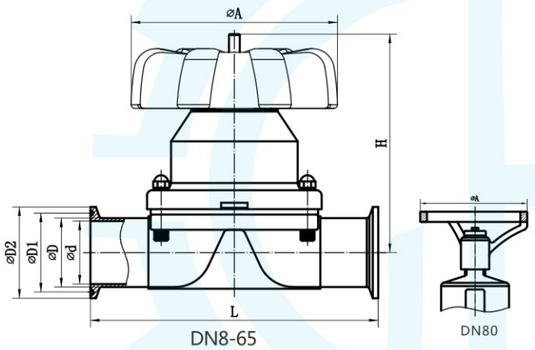

G81X/F-10R
手动快装隔膜阀

Technical parameters

Medium temperature: - 20 °C ~ + 150 °C
Ambient temperature: - 20 °C ~ + 60 °C
Nominal pressure: 0 ~ 1.0 MPa
Specification: DN8 ~ DN80
The handwheel material: PA66/304
The valve body material: 316 l
diaphragm material: EPDM EPDM +PTFE
Stem material: 2 cr13 (electrolysis),
Screw, nut material: 304

NPS	DN	L	A	H开	H关	d	D	D1	D2
1/4"	DN8	86	33	92	87	4.8	6.5	20.2	25.0
3/8"	DN10	63.5/86	33	92	87	7.8	9.5	20.2	25.0
1/2"	DN15	86	33	92	87	9.4	12.7	20.2	25.0
3/4"	DN20	108	58	85	79	15.8	19.1	20.2	25.0
1"	DN25	127	90	102	91	22.1	25.4	43.6	50.5
1¼"	DN32	146	90	108	97	28.5	31.8	43.6	50.5
1½"	DN40	159	114	122	110	34.8	38.1	43.6	50.5
2"	DN50	190	140	138	126	47.5	50.8	56.3	64.0
2½"	DN65	216	140	142	130	60.2	63.5	70.6	77.5
3"	DN80	254	195	256	244	72.9	76.2	83.5	91

G61X/F-10R

手动焊接隔膜阀

Manually Welded Diaphragm Valve



技术参数

介质温度：-20℃～+150℃
环境温度:-20℃～+60℃
公称压力:0~1.0MPa
规格：DN15~DN50
手轮材料：PA66/304
阀体材质：316L
膜片材质：EPDM EPDM+PTFE
阀杆材质:2Cr13（电解）
螺钉、螺母材质：304

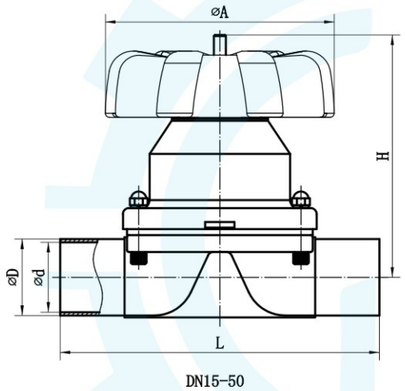

G61X/F-10R
手动焊接隔膜阀

Technical parameters

Medium temperature: - 20 °C ~ + 150 °C
Ambient temperature: - 20 °C ~ + 60 °C
Nominal pressure: 0 ~ 1.0 MPa
Specification: DN15 ~ DN50
The handwheel material: PA66/304
The valve body material: 316 l
diaphragm material: EPDM EPDM +PTFE
Stem material: 2 cr13 (electrolysis),
Screw, nut material: 304

NPS	DN	L	A	H开	H关	d	D
1/2"	DN15	86	33	92	87	9.4	12.7
3/4"	DN20	108	58	85	79	15.8	19.1
1"	DN25	127	90	102	91	22.1	25.4
1 1/4"	DN32	146	90	108	97	28.5	31.8
1 1/2"	DN40	159	114	122	110	34.8	38.1
2"	DN50	190	140	138	126	47.5	50.8

隔膜片
Diaphragm



由具有改性的三元乙丙橡胶制造而成聚合物材料用高强度织造材料粘合以确保最大的强度和耐久性，使用了最新的硫化技术，提高了用寿命更加长久，提高了可靠性。

The polymer materials are made of modified EPDM rubber and bonded with high-strength woven materials to ensure maximum strength and durability. The latest vulcanization technology is used to increase the service life and increase the reliability. .

PTFE(+EPDM支持片）双层隔膜片是国际上使用于卫生隔膜阀门上的高标准隔膜片形式，是满足频繁使用SIP灭菌的生产工艺最可靠产品；广泛用于血液制品、疫苗、生物制药、大 / 小容量注射剂、无菌生产、发酵、注射用水供应及分配回路上等领域。

PTFE (+EPDM support sheet) double-layer diaphragm is a high-standard diaphragm form used in sanitary diaphragm valves internationally. It is the most reliable product that meets the production process of frequent use of SIP sterilization; it is widely used in blood products, vaccines, and biological products. Pharmaceuticals, large/small volume injections, aseptic production, fermentation, injection water supply and distribution loops.

双层隔膜片配的EPDM支持片，除了起着保护与产品接触的PTFE片的作用外，还能加强PTFE片的密封效果。PTFE隔膜片配上EPDM支持一起使用，其可靠性及使用寿命都达到最佳水平

The EPDM support sheet of the double-layer diaphragm can not only protect the PTFE sheet in contact with the product, but also strengthen the sealing effect of the PTFE sheet. The PTFE diaphragm is used together with EPDM support, and its reliability and service life have reached the best level

性能特点/Property features

1、优异的耐蠕变和耐压性能
2、优异的热机械性能
3、优异的弯曲寿命
4、结构严密，无气孔
5、表面光滑不残留
6、突出的使用寿命

1. Excellent creep resistance and pressure resistance
2. Excellent thermomechanical properties
3. Excellent bending life
4. Tight structure, no pores
5. The surface is smooth and does not remain
6. Outstanding service life

指标/Index

执行标准Executive standard;FDA21CFR177. 2600
工作温度Working temperature:-120℃~150℃
工作压力Working pressure:Max.0. 6Mpa
设计寿命Designed lifetime:>300, 000次times/25℃
隔膜材料Diaphragm material:new type:PTFE
隔膜规格Diaphragm specification:DN8-DN125

隔膜片
Diaphragm

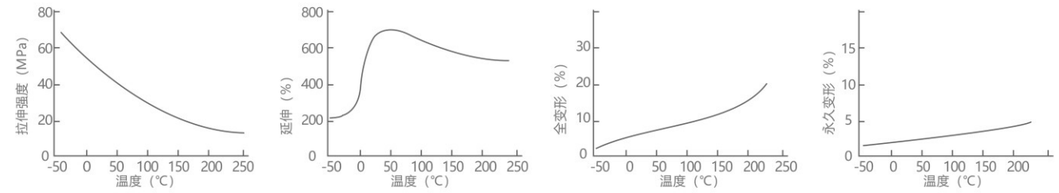

隔膜片尺寸表/Diaphragm size table

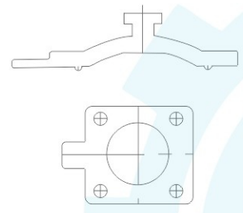

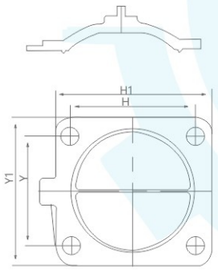

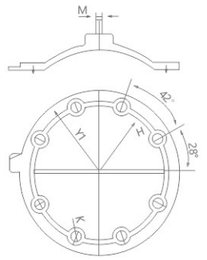

规格	HxY	H1xY1	M	K
DN6	21x21	35x35	9.5	5
DN8	21x21	35x35	9.5	5
DN10	21x21	35x35	9.5	5
DN15	36x32	51x48	M4	6
DN20	48x55	74x88	M6	9
DN25	48x55	74x88	M6	9
DN32	70x64	102x90	M6	11
DN40	70x64	102x90	M6	11
DN50	85x75	112x105	M6	13
DN65	105x91	134x126	M8	15
DN70	126x114	185x156	M8	15
DN80	126x114	185x156	M8	15
DN100	194x8	135	M8	15
DN125	194x8	135	M8	15

PNEUMATIC BALL VALVE SERIES »
气动球阀系列

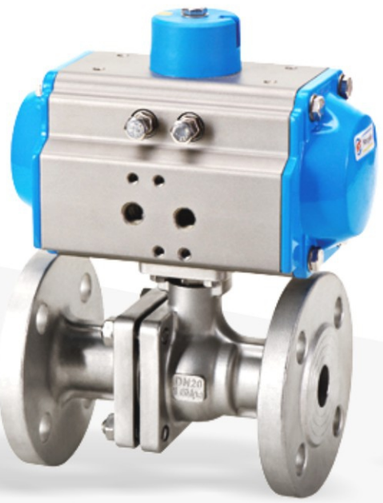

Q641F-16P/R
气动法兰球阀
Pneumatic flanged ball valves



Q681F-16P/R
气动卫生级快装球阀
Quick install ball valve pneumatic health level



Q681F-16P/R
气动快装球阀
Pneumatic fast loading the ball valve



Q671F-16P/R
气动意大利薄型对夹球阀
Pneumatic Italian thin ball valve to the clamp



Q614/5F-16P/R
气动三通螺纹球阀
Pneumatic tee threaded ball valve



Q611F-64P/R
气动高压螺纹球阀
Pneumatic high-pressure thread ball valve

气动球阀系列
Pneumatic Ball Valve Series



Q684/5F-16P/R
气动三通卫生级快装球阀
Pneumatic tee health level fast loading the ball valve



Q611F-16P/R
气动螺纹球阀
Pneumatic screw thread ball valve



Q684/5F-16P/R
气动三通全包快装球阀
Pneumatic tee turnkey fast ball valve



Q691X-10U
气动UPVC双由令球阀
Pneumatic UPVC double by ball valve



型号Q641F46-16C
气动衬氟法兰球阀
Pneumatic rubber fluorine flanged ball valves



VQ71H-16P/R
气动V型切断球阀
Pneumatic V cut off the ball



Q644/5F-16P/R
气动三通法兰球阀
Pneumatic tee flanged ball valves



Q641F-16P/R
调节型气动法兰球阀
External regulation pneumatic flanged ball valves



Q641F-16P/R
配防爆三联件气动法兰球阀
With explosion-proof sanlian pieces pneumatic flanged ball valves



Q611F-16P/R
三段式气动螺纹球阀
A three-stage pneumatic screw thread ball valve



Q641F-16P/R
气动三段式法兰球阀
Pneumatic three-step flanged ball valves

PNEUMATIC BUTTERFLY » VALVE SERIES

气动蝶阀系列

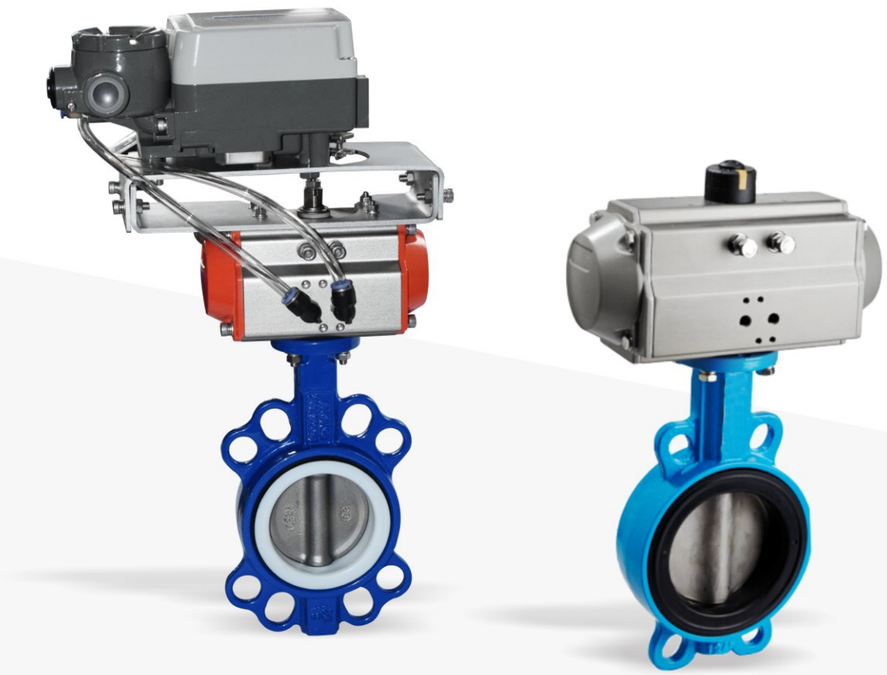

PERFECTION, INNOVATION,
CUSTOMER FIRST

完 善 创 新 用 户 至 上

气动蝶阀系列
Pneumatic Butterfly Valve Series

 D671X-16Q 配防爆三联件气动对夹蝶阀 With explosion-proof sanlian pieces of pneumatic butterfly valve to the clamp	 D671F-16P/R 气动全不锈钢对夹蝶阀 Pneumatic full stainless steel butterfly valves to the clamp	 D671F46-16C 气动衬氟对夹蝶阀 Pneumatic fluorine-butterfly butterfly valve to the clamp	 D643H-16C 气动硬密封法兰蝶阀 Pneumatic hard sealing flange butterfly valve
 D681X-16P/R 立式气动卫生级快装蝶阀 Vertical fast loading butterfly valve pneumatic health level	 D671X-10P/R 带回信器气动卫生级快装蝶阀 With letter opener fast loading butterfly valve pneumatic health level	 D673H-16P/R 气动三偏心硬密封对夹蝶阀 Three partial hardness pneumatic sealing butterfly valve to the clamp	 D681X-10P/R 气动卫生级快装蝶阀 Fast loading butterfly valve pneumatic health level
 D641X-10Q 气动法兰蝶阀 Pneumatic flange butterfly valve	 D671X-16Q 配两联件气动对夹蝶阀 With two couplet a pneumatic butterfly valve to the clamp	 D672H-16C 气动双偏心硬密封对夹蝶阀 Pneumatic double hardness sealing butterfly valve to the clamp	 D671X-10U 气动UPVC蝶阀 Pneumatic UPVC butterfly valve

气动执行器系列
Pneumatic Actuator Series

工作技术条件

1.工作介质：
干燥或润滑的空气或无腐蚀性气体介质中杂质微粒小于30μm.
2.气源压力：
最小气源压力2巴,最大气源压力8巴.
3.介质环境温度：
标准：-20℃～+80℃
低温:-40℃～+80℃
高温:-20℃～+160℃
4.行程调节：
0°和90°两个位置
有±5°的调节范围
5.使用场合：室内或室外安装

Operating conditions:

1.Operating media:
Dry or lubricated air, or the non-corrosive gasses
the maximum particle diameter must less than 30 μ m
2.Air supply pressure:
The Min supply pressure is 2 Bar
The Max supply pressure is 8 Bar
3.Operating temperature:
Standard: -20℃～+80℃
Low temperature:-40℃～+80℃
High temperature: -20～+160℃
4.Travel adjustment:
Have adjustment range of ±5°for the rotation at 0°and 90°
5.Use occasions:Indoor or outdoor installation

动作形式 Operating type :

双作用和单作用 Double acting and spring return

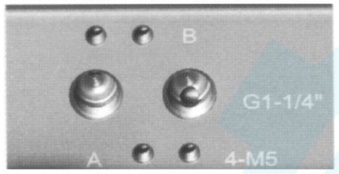

气源接口符合 NAMUR 标准，可简单方便地安装电磁阀。
Air supply connection is designed in accordance with NAMUR Standard to install solenoid valves.

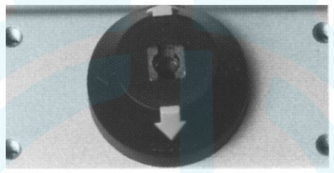

输出轴的NAMUR标准槽和缸体上部标准安装孔，可使限位开关、定位器直接啮合和安装。
The Namur drive pinion and the Namur top mounting connection permit direct installation of accessories such as limit switch box and positioner.

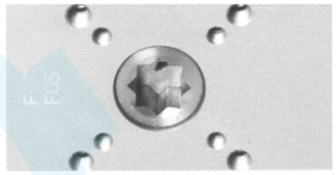

底部安装孔设计符合ISO5211、DIN3337标准,可以直接安装离合器(气动手轮机构)或安装机架.
Bottom mounting connection is designed in accordance with ISO5211 and DIN3337 standards for direct mounting with valve gear boxes or mounting brackets.

工作原理 Working Principle

双作用Double acting

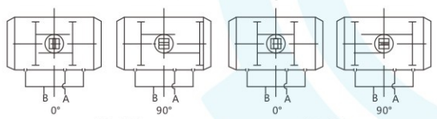

逆时针 Anticlockwise Rotation　　顺时针 Clockwise Rotation

单作用 spring returm

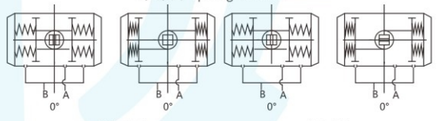

逆时针 Counter Clockwise Rotation　　顺时针 Clockwise Rotation

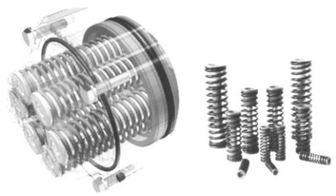



单作用执行器弹簧位置
Spring positions of Spring Return Actuators





气动执行器系列
Pneumatic Actuator Series

双作用执行器输出扭矩(单位:Nm)Double Acting Actuator Output Torque(Unit:Nm)

型号 Model	输入气源压力（单位：巴）Input air supply pressure (unit:Bar)						
	2	3	4	5	6	7	8
AT32D	3.1	4.7	6.2	7.8	9.4	11	12.5
AT52D	8.5	12.7	17	21.2	25.5	29.7	34
AT63D	15	22.5	30	37.5	44.9	52.4	59.7
AT75D	21	31.8	42.4	53	63.6	74.2	84.8
AT83D	32.5	48.7	65	81.2	97.4	113.7	130
AT92D	46.5	69.8	93	116.3	140	162.9	186
AT105D	69.3	104	138.5	173.2	207.8	242.5	277
AT125D	108	162	216	270	324	378	432
AT140D	184.7	277	369.5	461.8	554	646.5	739
AT160D	281.5	422	563	704	844	985	1126
AT190D	453	680	907	1135	1361	1587	1814
AT210D	554	831	1108	1384	1662	1939	2216
AT240D	814	1221	1628	2035	2442	2849	3256
AT270D	1236	1854	2472	3090	3708	4326	4944

单作用执行器输出扭矩（单位：Nm）Spring Return Actuator Output Torque(Unit:Nm)

气源克服弹簧输出力矩 Output torque of air to spring														弹簧输出力矩 Output torque spring	
气源气压 Air supply pressure		3Bar		4Bar		5Bar		6Bar		7Bar		8Bar			
型号 Model	弹簧数量 Spring Qty	0°	90°	0°	90°	0°	90°	0°	90°	0°	90°	0°	90°	0°	90°
		开始 Start	结束 End	开始 Start	结束 End	开始 Start	结束 End	开始 Start	结束 End	开始 Start	结束 End	开始 Start	结束 End	开始 Start	结束 End
AT52SR	5	8.8	7.3	13.0	11.6									5.4	4.0
	6	8.0	6.3	12.2	10.5	16.5	14.8							6.5	4.7
	7	8.2	5.2	11.5	9.4	15.7	13.7	20.0	17.9					7.6	5.5
	8	6.4	4.1	10.7	8.3	14.9	12.6	19.2	16.8	23.4	21.1			8.6	6.3
	9			9.9	7.3	14.1	11.5	18.4	15.8	22.6	20.0	26.9	24.3	9.7	7.1
	10			9.1	6.2	13.3	10.4	17.6	14.7	21.8	18.9	26.1	23.2	10.8	7.9
	11					12.5	9.4	16.8	13.6	21.0	17.9	25.3	22.1	11.9	8.7
	12					11.8	8.3	16.0	12.5	20.3	16.8	24.5	21.0	13.0	9.5
AT63SR	5	15.7	12.5	23.1	20.0									9.9	6.8
	6	14.3	10.5	21.8	18.0	29.3	25.5							11.9	8.1
	7	13.0	8.5	20.4	16.0	27.9	23.5	35.4	31.0					13.9	9.5
	8	11.6	6.5	19.1	14.0	26.6	21.5	34.0	29.0	41.5	36.5			15.9	10.8
	9			17.7	12.0	25.2	19.5	32.7	27.0	40.2	34.5	47.6	42.0	17.9	12.2
	10			16.4	10.0	23.8	17.5	31.3	25.0	38.8	32.5	46.3	40.0	19.9	13.6
	11					22.5	15.5	30.0	23.0	37.5	30.5	44.9	38.0	21.9	14.9
	12					21.1	13.5	28.6	21.0	36.1	28.5	43.6	36.0	23.9	16.3
AT75SR	5	27.0	21.6	39.3	34.0									15.5	10.2
	6	24.9	18.5	37.3	30.9	49.7	43.3							18.6	12.2
	7	22.9	15.5	35.3	27.8	47.6	40.2	60.0	52.6					21.7	14.2
	8	20.9	12.4	33.2	24.7	45.6	37.1	58.0	49.5	70.4	61.8			24.8	16.2
	9			31.2	21.6	43.6	34.0	56.0	46.4	68.3	58.7	80.7	71.1	27.8	18.3
	10			29.2	18.5	41.6	30.9	53.9	43.3	66.3	55.7	78.8	68.0	30.9	20.3
	11					39.5	27.8	51.9	40.2	64.3	52.6	76.6	64.9	34.0	22.3
	12					37.5	24.7	49.9	37.1	62.2	49.5	74.6	61.8	37.1	24.4

气动执行器系列
Pneumatic Actuator Series

单作用执行器输出扭矩（单位：Nm） Spring Return Actuator Output Torque(Unit:Nm)

气源克服弹簧输出力矩 Output torque of air to spring														弹簧输出力矩 Output torque spring	
气源气压 Air supply pressure		3Bar		4Bar		5Bar		6Bar		7Bar		8Bar			
型号 Model	弹簧数量 Spring Qty	0°	90°	0°	90°	0°	90°	0°	90°	0°	90°	0°	90°	0°	90°
		开始 Start	结束 End	开始 Start	结束 End	开始 Start	结束 End	开始 Start	结束 End	开始 Start	结束 End	开始 Start	结束 End	开始 Start	结束 End
AT83S	5	33.8	27.2	50.1	43.4									21.5	14.9
	6	30.9	22.9	47.1	39.1	63.3	55.3							25.8	17.8
	7	27.9	18.6	44.1	34.8	60.4	51.0	76.6	67.3					30.1	20.8
	8	24.9	14.3	41.2	30.5	57.4	46.7	73.6	63.0	89.9	79.2			34.4	23.8
	9			38.2	26.2	54.4	42.4	70.7	58.7	86.9	74.9	103.1	91.1	38.7	26.7
	10			35.2	21.9	51.5	38.1	67.7	54.4	83.9	70.6	100.2	86.8	43.0	29.7
	11					48.5	33.8	64.7	50.1	81.0	66.3	97.2	82.5	47.3	32.7
	12					45.5	29.5	61.8	45.8	78.0	62.0	94.2	78.2	51.6	35.6
AT92S	5	48.0	39.5	71.3	62.8									30.3	21.8
	6	43.7	33.5	66.9	56.7	90.2	80.0							35.6	26.1
	7	39.3	27.4	62.6	50.7	85.8	73.9	109.1	97.2					42.4	30.5
	8	34.9	21.4	58.2	44.6	81.5	67.9	104.7	91.2	128.0	114.4			48.4	34.9
	9			53.8	38.6	77.1	61.8	100.4	85.1	123.6	108.4	146.9	131.6	54.5	39.2
	10			49.5	32.5	72.8	55.8	96.0	79.0	119.3	102.3	142.6	125.6	60.6	43.6
	11					68.4	49.7	91.7	73.0	114.9	96.3	138.2	119.5	66.6	47.9
	12					64.0	43.7	87.3	66.9	110.6	90.2	133.8	113.5	72.7	52.3
AT105S	5	64.6	57.7	99.2	92.4									46.2	39.3
	6	56.7	48.5	91.4	83.1	126.0	117.8							55.4	47.2
	7	48.9	39.3	83.5	73.9	118.2	108.5	152.8	143.2					64.6	55.0
	8	41.0	30.0	7507.0	64.7	110.3	99.3	144.9	133.9	179.6	168.6			73.9	62.9
	9			67.8	55.4	102.4	90.1	137.1	124.7	171.7	159.3	206.3	194.0	83.1	70.7
	10			59.9	46.2	94.6	80.8	129.2	115.5	163.9	150.1	198.5	184.7	92.3	78.6
	11					86.7	71.6	121.4	106.2	156.0	140.9	190.6	175.5	101.6	86.5
	12					78.9	62.4	113.5	97.0	148.1	131.6	182.8	166.3	110.8	94.3
AT125S	5	131	104	192	166									80	53
	6	120	88	182	150	243	211							96	64
	7	110	72	171	134	232	195	294	257					112	74
	8	99	56	161	118	222	179	283	241	345	302			128	85
	9			150	102	211	163	273	225	334	286	395	347	144	96
	10			139	86	201	147	262	209	323	270	385	331	160	106
	11					190	131	251	193	313	254	374	315	175	117
	12					179	115	241	177	302	2038	363	299	191	127
AT140S	5	188	144	280	236									133	89
	6	170	117	263	209	355	302							160	107
	7	152	90	245	183	337	275	430	368					187	125
	8	135	64	227	156	319	249	412	341	504	433			213	142

气动执行器系列
Pneumatic Actuator Series

单作用执行器输出扭矩（单位：Nm） Spring Return Actuator Output Torque(Unit:Nm)

气源克服弹簧输出力矩 Output torque of air to spring														弹簧输出力矩 Output torque spring	
气源气压 Air supply pressure		3Bar		4Bar		5Bar		6Bar		7Bar		8Bar			
型号 Model	弹簧数量 Spring Qty	0°	90°	0°	90°	0°	90°	0°	90°	0°	90°	0°	90°	0°	90°
		开始 Start	结束 End	开始 Start	结束 End	开始 Start	结束 End	开始 Start	结束 End	开始 Start	结束 End	开始 Start	结束 End	开始 Start	结束 End
AT140S	9			209	129	302	222	394	314	486	407	579	499	240	160
	10			191	103	284	195	376	288	469	380	561	472	267	178
	11					266	169	358	261	451	353	543	446	293	196
	12					248	142	341	234	433	327	525	419	320	214
AT160S	5	286	222	427	362									201	136
	6	259	182	400	322	541	463							241	163
	7	232	141	373	282	513	423	654	564					281	190
	8	205	101	345	242	486	383	627	524	768	664			321	218
	9			318	202	459	343	600	483	741	624	881	765	361	245
	10			291	162	432	303	573	443	713	584	854	725	401	272
	11					405	263	545	403	686	544	827	685	441	299
	12					377	222	518	363	659	504	800	645	481	326
AT190S	5	448	332	675	559									349	232
	6	402	262	629	489	856	716							418	278
	7	356	192	582	419	809	646	1036	873					488	325
	8	309	123	536	350	763	576	990	803	1217	1030			558	371
	9			490	280	717	507	943	733	1170	960	1397	1187	627	418
	10			443	210	670	437	897	664	1124	891	1351	1117	697	464
	11					624	367	851	594	1077	821	1304	1048	767	510
	12					577	297	804	524	1031	751	1258	978	837	557
AT210S	5	638	468	950	780									467	297
	6	579	375	890	687	1202	998							560	356
	7	519	282	831	593	1143	905	1455	1217					654	416
	8	460	188	772	500	1083	812	1395	1123	1707	1435			747	475
	9			712	407	1024	718	1336	1030	1647	1342	1959	1653	840	535
	10			653	313	965	625	1276	937	1588	1248	1900	1560	934	594
	11					905	531	1217	843	1529	1155	1840	1467	1027	653
	12					846	438	1158	750	1469	1062	1781	1373	1121	713
AT240S	5	963	666	1452	1155									799	503
	6	862	506	1351	995	1840	1484							959	603
	7	762	346	1250	835	1739	1324	2228	1812					1119	704
	8	661	187	1150	675	1639	1164	2127	1652	2616	2141			1279	804
	9			1049	515	1538	1004	2027	1492	2525	1981	3004	2470	1439	905
	10			949	355	1437	844	1926	1333	2415	1821	2903	2310	1599	1005
	11					1337	684	1825	1173	2315	1661	2803	2150	1759	1106
	12					1236	524	1725	1013	2213	1501	2702	1990	1919	1207
AT270S	5	1431	1028	2118	1715									1033	630
	6	1305	821	1992	1508	2679	2195							1240	756
	7	1179	615	1866	1302	2553	1989	3240	2676					1446	882
	8	1053	408	1740	1095	2427	1782	3114	2469	3801	3156			1653	1008
	9			1614	889	2301	1576	2988	2263	3675	2950	4363	3637	1860	1134
	10			1488	682	2175	1369	2862	2056	3549	2743	4237	3430	2066	1260
	11					2049	1162	2736	1849	3423	2536	4111	3223	2273	1386
	12					1923	956	2610	1643	3297	2330	3985	3017	2480	1512

气动执行器系列
Pneumatic Actuator Series

AT Pneumatic actuator

AT型气动执行器

外观尺寸General Drawing

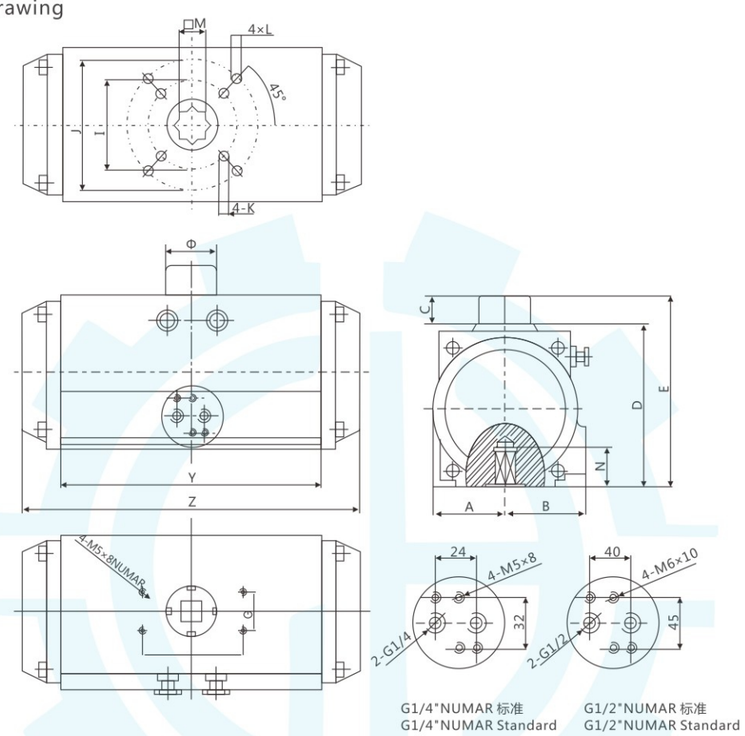

G1/4"NUMAR 标准
G1/4"NUMAR Standard

G1/2"NUMAR 标准
G1/2"NUMAR Standard

外形连接尺寸 Overview Dimension

型号Model		A	B	C	D	E	G	H	I	J	K	L	M	N	Z	Y	Φ	气源接口 Air Supply
AT32	DA/SR	22.5	22.5	20	45	99	30	50	-	F03	-	M5×8	9×9	15	153		34	G1/8"
AT52	DA/SR	30	41	20	72	115	30	80	F03	F05	M5×8	M6×10	11×11	15	174	108	34	G1/4"
AT63	DA/SR	36	46	20	89	126	30	80	F05	F07	M6×10	M8×12	14×14	15	189	126	34	G1/4"
AT75	DA/SR	42	52	20	100	135	30	80	F05	F07	M6×10	M8×12	14×14	15	215	128	34	G1/4"
AT83	DA/SR	46	55	20	109	145	30	80	F05	F07	M6×10	M8×12	14×14	15	247	152	34	G1/4"
AT92	DA/SR	51	57.5	20	117	162	30	80	F05	F07	M6×10	M8×12	17×17	17	277	173	41	G1/4"
AT105	DA/SR	58	64	20	134	195	30	80	F07	F10	M8×12	M10×16	22×22	25	310	189	41	G1/4"
AT125	DA/SR	67.5	70	30	157	212	30	80	F07	F10	M8×12	M10×16	22×22	25	393	209	41	G1/4"
AT140	DA/SR	76	77	30	174	229	30	130	F10	F12	M10×16	M12×20	27×27	30	470	285	62	G1/4"
AT160	DA/SR	86.5	87.5	30	199	229	30	130	F10	F12	M10×16	M12×20	27×27	30		308	62	G1/4"
AT190	DA/SR	103	103	30	233	263	30	130	F10	F12	M10×16	M12×20	36×36	34			62	G1/4"
AT210	DA/SR	113	113	30	257	287	30	130	-	F12	-	M12×20	36×36	34			79	G1/4"
AT240	DA/SR	129	129	30	293	323	30	130	-	F16	-	M20×24	36×36	34			79	G1/4"
AT270	DA/SR	146	146	30	333	363	30	130	-	F16	-	M20×24	46×46	52			79	G1/4"

气动执行器系列
Pneumatic Actuator Series

AT Pneumatic actuator

AT型气动执行器

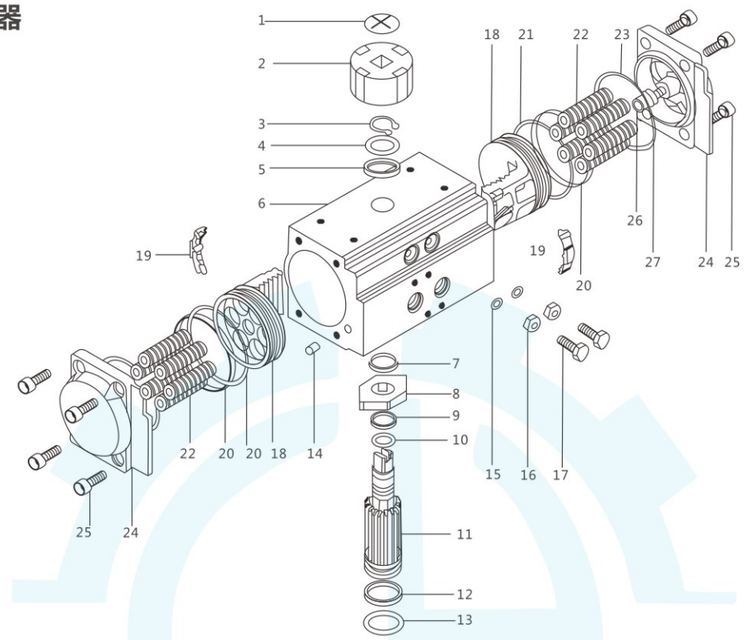

零件和材料 Parts and Materials

序号 No	零件名称 Parts name	数量 Qty	材料 Material	防腐处理 Anti-corrosive	可选材料 Optional materials
1	指示器螺钉 Indicator screw	1	塑料 Plastic		
2	指示器 Indicator	1	塑料 Plastic		
3	卡簧 Spring clip	1	不锈钢 Stainless steel		
4	垫圈 Washer	1	不锈钢 Stainless steel		
5	外垫片 Outer gasket	1	工程塑料 Engineering plastics		
6	缸体 Cylinder body	1	铸铝 Cast aluminum	硬质氧化等 Hard anodizing	
7	内垫片 Inner gasket	1	工程塑料 Engineering plastics		
8	凸轮 Cam	1	合金钢 Alloy steel		氟/硅橡胶 Viton/Silicone rubber
9	上轴O圈 Oring(Pinion top)	1	丁腈橡胶 NBR		
10	上轴轴承 Bearing(Pinion top)	1	工程塑料 Engineering plastics		
11	齿轴 Pinion	1	合金钢 Alloy steel	镀镍 Nickel plating	不锈钢 Stainless steel
12	下轴轴承 Bearing(Pinion botom)	1	工程塑料 Engineering plastics		
13	下轴O圈 Oring(Pinion botom)	1	丁腈橡胶 NBR		氟/硅橡胶 Viton/Silicone rubber
14	堵头 Plug	2	丁腈橡胶 NBR		氟/硅橡胶 Viton/Silicone rubber
15	调节螺钉O圈 Adjusting screw Oring	2	丁腈橡胶 NBR		氟/硅橡胶 Viton/Silicone rubber
16	调节螺钉螺母 Adjusting screw nut	2	不锈钢 Stainless steel		
17	调节螺栓 Adjusting bolt	2	不锈钢 Stainless steel		
18	活塞 Piston	2	铸铝/铸钢 Engineering plastics	氧化/镀锌 Oxidation/Zinc plating	不锈钢 Stainless steel
19	活塞导板 Piston guide	2	工程塑料 Engineering plastics		
20	活塞轴承 Piston bearing	2	工程塑料 Engineering plastics		
21	活塞O圈 Piston Oring	2	丁腈橡胶 NBR		氟/硅橡胶 Viton/Silicone rubber
22	弹簧 Spring	0-12	弹簧钢 Spring steel	浸漆 Dipping paint	
23	端盖O圈 End cover Oring	2	丁腈橡胶 NBR		氟/硅橡胶 Viton/Silicone rubber
24	端盖 End cover	2	铸铝 Cast aluminum	粉末喷涂 Powder coating	
25	端盖螺栓 End cover bolt	8	不锈钢 Stainless steel		
26	限位螺栓 Limit bolt	2	不锈钢 Stainless steel		
27	限位螺母 Limit nut	2	不锈钢 Stainless steel		

Q641F-16P/R

气动高平台法兰球阀

Pneumatic High Platform Flange Ball Valve



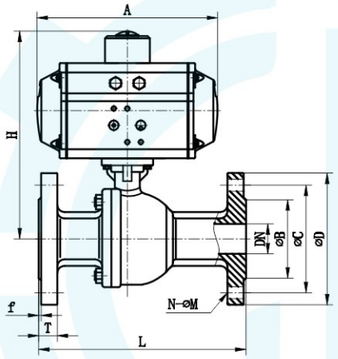

Q641F-16P/R
气动高平台法兰球阀

技术参数

介质温度：-20℃～+180℃
环境温度:-20℃～+60℃
公称压力:0~1.6MPa
控制气体：中性气体，空气
气源压力：0.3~0.8MPa
规格：DN15-DN200
阀体材质：CF8 CF8M
阀座材质：PTFE
阀杆材质:304
密封圈材质:NBR

Technical parameters

Medium temperature: - 20 ℃ ~ + 180 ℃
Ambient temperature: - 20 ℃ ~ + 60 ℃
Nominal pressure: 0 ~ 1.6 MPa
Control gas, gas, air
Air pressure: 0.3 ~ 0.8 MPa
Specification: DN15 - DN200
The valve body material: CF8 CF8M
seat material:PTFE
Stem material: 304
Sealing ring material: NBR

型 号 model	L	T	f	D	C	B	A	H	N-M	执行器 Actuator
DN15	130	14	2	95	65	45	163	164	4-Φ14	AT63
DN20	140	15	2	105	75	54	163	170	4-Φ14	AT63
DN25	150	16	2	115	85	65	163	175	4-Φ14	AT63
DN32	165	16	2	135	100	78	163	184	4-Φ18	AT63
DN40	180	17	2	145	110	85	214	214	4-Φ18	AT75
DN50	200	18	2	160	125	100	252	225	4-Φ18	AT88
DN65	220	18	2	180	145	120	252	253	4-Φ18	AT88
DN80	250	18	2	195	160	135	315	296	8-Φ18	AT115
DN100	280	20	2	215	180	155	354	322	8-Φ18	AT125
DN125	320	22	3	245	210	185	418	408	8-Φ18	AT145
DN150	360	24	3	280	240	210	450	465	8-Φ22	AT160
DN200	400	26	3	335	295	265	530	552	12-Φ22	AT210

Q611F-16P/R

气动螺纹球阀

Pneumatic Thread Ball Valve



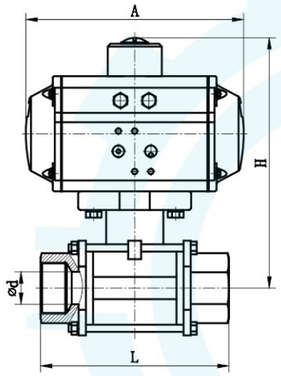

Q611F-16P/R
气动螺纹球阀

技术参数

介质温度：-20℃～+180℃
环境温度:-20℃～+60℃
公称压力:0~4.0MPa
控制气体：中性气体，空气
气源压力：0.3~0.8MPa
规格：DN15~DN100
阀体材质：CF8 CF8M
阀座材质：PTFE
阀杆材质:304
密封圈材质:NBR

Technical parameters

Medium temperature: - 20 ℃~ + 180 ℃
Ambient temperature: - 20 ℃ ~ + 60 ℃
Nominal pressure: 0 ~ 4.0 MPa
Control gas, gas, air
Air pressure: 0.3 ~ 0.8 MPa
Specification: DN15~DN100
The valve body material: CF8 CF8M
seat material:PTFE
Stem material: 304
Sealing ring material: NBR

型 号 model	d	L	A	H	执行器 Actuator
1/2"	15	75	146	137	AT50
3/4"	20	80	146	141	AT50
1"	25	90	146	151	AT50
1 1/4"	32	110	163	172	AT63
1 1/2"	38	120	163	185	AT63
2"	50	140	214	209	AT75
2 1/2"	65	185	252	240	AT88
3"	78	205	270	264	AT100
4"	98	240	316	310	AT115

Q681F-10P/R

气动卫生级快装球阀

Pneumatic Sanitary Quick-install Ball Valve



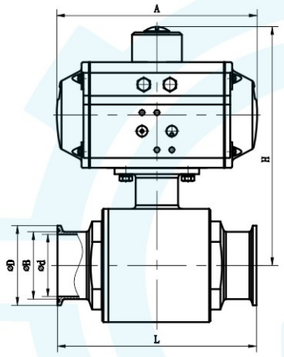

Q681F-10P/R
气动卫生级快装球阀

技术参数

介质温度：-20℃～+180℃
环境温度:-20℃～+60℃
公称压力:0~1.0MPa
控制气体：中性气体，空气
气源压力：0.3~0.8MPa
规格：Φ19-Φ159
阀体材质：CF8 CF8M
阀座材质：PTFE
阀杆材质:304
密封圈材质:NBR

Technical parameters

Medium temperature: - 20 ℃ ~ + 180 ℃
Ambient temperature: - 20 ℃ ~ + 60 ℃
Nominal pressure: 0 ~ 1.0 MPa
Control gas, gas, air
Air pressure: 0.3 ~ 0.8 MPa
Specification: Φ19-Φ159
The valve body material: CF8 CF8M
seat material:PTFE
Stem material: 304
Sealing ring material: NBR

型 号 model	L	d	D	A	H	执行器 Actuator
Φ19	108	16	50.5	146	144	AT50
Φ25	112	22	50.5	146	149	AT50
Φ32	125	29	50.5	146	156	AT50
Φ38	135	35	50.5	163	180	AT63
Φ45	150	42	64	163	192	AT63
Φ51	160	48	64	214	205	AT75
Φ57	170	53	77.5	214	212	AT75
Φ63	178	59	77.5	252	225	AT88
Φ76	220	72	91	252	230	AT88
Φ89	240	85	106	270	265	AT100
Φ102	270	97	119	316	295	AT115
Φ114	320	108	130	316	300	AT115
Φ133	400	125	145	354	312	AT125
Φ159	480	150	172	350	350	AT145

Q641F-16P/R

气动V型对夹球阀

Pneumatic V-shaped Wafer Ball Valve



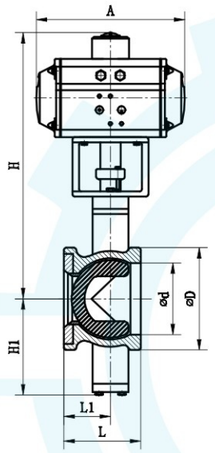

VQ641F-16P/R
气动V型对夹球阀

技术参数

介质温度：-20℃～+180℃
环境温度:-20℃～+60℃
公称压力:0~1.6MPa
控制气体：中性气体，空气
气源压力：0.3~0.8MPa
规格：DN25-DN250
阀体材质：CF8 CF8M
阀座材质：PTFE 硬质合金
阀杆材质:304
密封圈材质:NBR

Technical parameters

Medium temperature: - 20 ℃ ~ + 180 ℃
Ambient temperature: - 20 ℃ ~ + 60 ℃
Nominal pressure: 0 ~ 1.6 MPa
Control gas, gas, air
Air pressure: 0.3 ~ 0.8 MPa
Specification: DN25 - DN250
The valve body material: CF8 CF8M
seat material: carbide PTFE
Stem material: 304
Sealing ring material: NBR

型 号 model	d	D	L	L1	A	H	H1	执行器 Actuator
DN25	38	68	50	30	163	248	81	AT63
DN32	45	76	60	35	214	270	88	AT75
DN40	50	84	60	35	214	275	90	AT75
DN50	62	100	75	43	252	295	93	AT88
DN65	73	118	100	50	270	322	108	AT100
DN80	90	132	100	57	316	362	123	AT115
DN100	115	158	115	65	354	387	138	AT125
DN125	134	184	129	78	418	423	148	AT145
DN150	164	216	160	95	450	475	170	AT160
DN200	206	268	200	120	518	535	200	AT190
DN250	260	326	240	148	530	615	240	AT210

D671F-10P/R

气动对夹球阀

Pneumatic Wafer Ball Valve



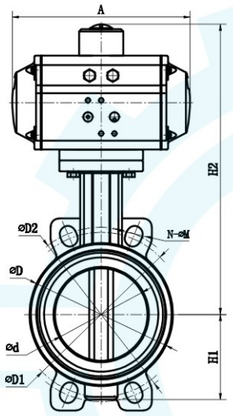

D671F-10P/R
气动对夹碟阀

技术参数

介质温度：-20℃～+180℃
环境温度:-20℃～+60℃
公称压力:0~1.6MPa
控制气体：中性气体，空气
气源压力：0.3~0.8MPa
规格：DN40-DN300
阀体材质：WCB CF8 CF8M
阀座材质：PTFE EPDM NBR FPM
阀杆材质:304
密封圈材质:NBR

Technical parameters

Medium temperature: - 20 ℃ ~ + 180 ℃
Ambient temperature: - 20 ℃ ~ + 60 ℃
Nominal pressure: 0 ~ 1.6 MPa
Control gas, gas, air
Air pressure: 0.3 ~ 0.8 MPa
Specification: DN40-DN300
The valve body material: WCB CF8 CF8M
seat material: EPDM, NBR FPM PTFE
Stem material: 304
Sealing ring material: NBR

型 号 model	d	L	D	D1	D2	A	H1	H2	N–ΦM	执行器 Actuator
DN40	38	33	83	98.5	110	146	62	232	4-Φ18	AT50
DN50	50	43	99	120	125	163	62	260	4-Φ18	AT63
DN65	64	46	115	139.5	145	163	80	265	4-Φ18	AT63
DN80	76	46	130	146	160	163	90	275	4-Φ19	AT63
DN100	102	52	150	178	190.5	214	105	306	4-Φ19	AT75
DN125	123	56	180	210	216	252	118	330	4-Φ22	AT88
DN150	146	56	207	230	238	270	130	354	4-Φ22	AT100
DN200	203	60	265	295	295	354	165	427	4-Φ22	AT125
DN250	250	68	314	340	358	418	200	462	4-Φ26	AT145
DN300	300	78	370	395	425	450	232	522	4-Φ26	AT160

D641X-16C

气动法兰蝶阀

Pneumatic Flange Butterfly Valve



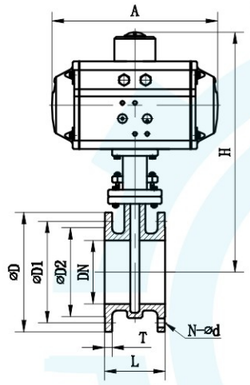

D641X-16C
气动法兰碟阀

技术参数

介质温度：-20℃～+150℃
环境温度:-20℃～+60℃
公称压力:0~1.6MPa
控制气体：中性气体，空气
气源压力：0.3~0.8MPa
规格：DN50-DN600
阀体材质：WCB CF8 CF8M
阀板材质：WCB Cf8 CF8M
阀座材质：EPDM NBR FPM
阀杆材质:304
密封圈材质:NBR

Technical parameters

Medium temperature: - 20 ℃ ~ + 150 ℃
Ambient temperature: - 20 ℃ ~ + 60 ℃
Nominal pressure: 0 ~ 1.6 MPa
Control gas, gas, air
Air pressure: 0.3 ~ 0.8 MPa
Specification:DN50~DN600
The valve body material: WCB CF8 CF8M
The valve material: WCB Cf8 CF8M
The seat material: EPDM, NBR FPM
Stem material: 304
Sealing ring material: NBR

型 号 model	L	D	D1	D2	T	A	H	N-d	执行器 Actuator
DN50	108	165	125	102	20	214	320	4-18	AT75
DN65	112	185	145	122	20	214	323	4-18	AT75
DN80	114	200	160	133	22	214	335	8-18	AT75
DN100	127	220	180	158	24	252	390	8-18	AT88
DN125	140	250	210	184	26	270	408	8-18	AT100
DN150	140	285	240	212	28	316	458	8-22	AT115
DN200	152	340	295	268	28	354	512	12-23	AT125
DN250	165	405	335	320	30	418	570	12-26	AT145
DN300	178	460	410	370	30	450	640	16-26	AT160
DN350	190	520	470	430	30	518	700	16-23	AT190
DN400	216	580	525	484	32	530	755	16-30	AT210
DN450	222	640	585	532	32	660	772	16-30	AT240
DN500	229	715	650	585	34	730	852	16-26	AT270
DN600	267	840	770	685	36	880	930	16-30	AT300

D681X-10P/R

气动卫生级快装蝶阀

Pneumatic Sanitary Quick-install Butterfly Valve



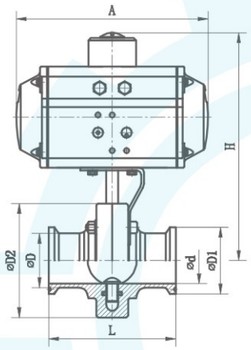

D681X-10P/R
气动卫生级快装碟阀

技术参数

介质温度：-20℃～+120℃
环境温度:-20℃～+60℃
公称压力:0～1.0MPa
控制气体：中性气体，空气
气源压力：0.3～0.8MPa
规格：Φ19-Φ219
阀体材质：304、316
阀板材质：CF8 CF8M
阀座材质：EPDM NBR FPM
阀杆材质:304
密封圈材质:NBR

Technical parameters

Medium temperature: - 20 ℃ ~ + 120 ℃
Ambient temperature: - 20 ℃ ~ + 60 ℃
Nominal pressure: 0 ~ 1.0 MPa
Control gas, gas, air
Air pressure: 0.3 ~ 0.8 MPa
Specification: Φ19-Φ219
The valve body material: 304, 316
The valve material: CF8 CF8M
The seat material: EPDM, NBR FPM
Stem material: 304
Sealing ring material: NBR

型 号 model	L	d	D	D1	D2	A	H	执行器 Actuator
Φ19	66	16	19.1	25.2	78	146	165	AT50
Φ25	66	22	25.4	50.5	78	146	165	AT50
Φ32	66	29	31.8	50.5	78	146	165	AT50
Φ38	70	35	38.1	50.5	86	146	169	AT50
Φ45	70	42	45.1	64	90	146	175	AT50
Φ51	76	48	50.8	64	102	163	190	AT63
Φ57	76	53	57.1	77.5	106	163	195	AT63
Φ63	80	59	63.5	77.5	115	163	200	AT63
Φ76	84	72	76.2	91	128	163	205	AT63
Φ89	90	85	88.9	106	139	214	215	AT75
Φ102	90	98	101.6	119	154	214	220	AT75
Φ108	90	104	108	119	154	252	230	AT88
Φ133	122	127	133	145	185	252	242	AT88
Φ159	132	153	159	183	215	270	265	AT100
Φ219	132	211	219	233	290	354	325	AT125

Q644(5)F(N、P、H、Y)-PN16、25

气动三通球阀

Pneumatic Three-way Ball Valve



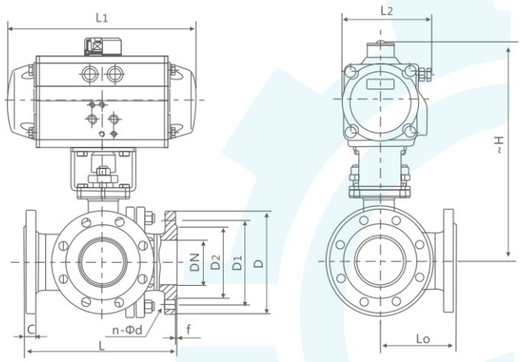

技术参数

公称压力：1.6、2.5、4.0、6.4MPa；
150Lb、300Lb、600Lb
结构：法兰式、内螺纹式
尺寸标准：国标、美标、日标
规格：DN15-300mm
阀体材质：WCB CF8 CF8M CF3 CF3M
阀座材质：聚四氟乙烯（F）
对位聚苯PPL（P）
硬质合金钢（H、Y）
作用方式：双作用、单作用（弹簧复位）
控制方式：换向、分流、合流

Technical Parameters

Nominal pressure: 1.6, 2.5, 4.0, 6.4MPa;
150Lb, 300Lb, 600Lb
Structure: flange type, internal thread type
Size standard: GB, API, JIS
Specification: DN15-300mm
Body material: WCB CF8 CF8M CF3 CF3M
Seat material: polytetrafluoroethylene (F),
para-polyphenylene PPL (P),
hard alloy steel (H, Y)
Mode of action: double action, single action (spring return)
Control mode: commutation, divert, merge

主要外形及连接法兰尺寸Q644F(P、H、Y)-PN16(1.6MPa) Overview Dimension

公称通径 Nominal diameter		外形尺寸 Dimension					连接尺寸Connecting Size					
mm	in	L	Lo	L1	L2	~H	D	D1	D2	C	f	n-Φd
15	1/2	150	72	141/159	71/83	240/235	95	65	46	14	2	4-Φ14
20	3/4	160	80	159/211	83/95	240/252	105	75	56	16	2	4-Φ14
25	1	180	90	211/248	95/107	257/265	115	85	65	16	2	4-Φ14
32	1 1/4	200	100	211/248	95/107	277/312	140	100	76	18	3	4-Φ18
40	1 1/2	220	110	248/269	107/123	292/317	150	110	84	18	3	4-Φ18
50	2	240	120	248/345	107/152	325/347	165	125	99	20	3	4-Φ18
65	2 1/2	260	130	315/409	141/172	357/389	185	145	118	20	3	4-Φ18
80	3	280	140	345/409	152/172	368/400	200	160	132	20	3	8-Φ18
100	4	320	160	409/550	172/215	410/498	220	180	156	22	3	8-Φ18
125	5	380	190	438/600	187/240	470/538	250	210	184	22	3	8-Φ18
150	6	440	220	550/633	215/262	556/591	285	240	211	24	3	8-Φ22
200	8	550	260	600/730	210/330	648/687	340	295	266	24	3	12-Φ22

ELECTRIC BUTTERFLY VALVE SERIES

电动蝶阀系列



D971F-16Q

电动对夹蝶阀
Electric butterfly valve to the clamp



D971X-16Q

电动对夹蝶阀
Electric butterfly valve to the clamp



D981X-16P/R

电动卫生级快装蝶阀
Electric level health fast loading butterfly valve



D971F-16Q

防爆电动对夹蝶阀
Explosion-proof electric butterfly valve to the clamp



D971X-10U

电动UPVC蝶阀
UPVC butterfly valvesThe



D971X-10P

电动全不锈钢对夹蝶阀
Electric stainless steel butterfly valves to the clamp

电动球阀系列
Electric Ball Valve Series



Q941F-16P/R

电动法兰球阀
Electric flanged ball valve



Q941F-16P/R

防爆电动法兰球阀
Explosion-proof electric flanged ball valves



Q911F-16P/R

电动螺纹球阀
Electric thread ball valve



Q911F-16P/R

防爆电动螺纹球阀
Explosion-proof electric threaded ball valve



Q941F-16P/R

电动三片式法兰球阀
Three type electric flanged ball valves



Q981F-16P/R

电动三片式快装球阀
The electric three chip fast loading ball valve



Q944/5F-16P/R

电动三通法兰球阀
Electric 3-way flanged ball valves



Q984/5F-16P/R

电动三通卫生级快装球阀
Electric three-way sanitary class quick ball valve



Q971F-16P/R

电动意大利薄型对夹球阀
Electric Italian thin ball valve to the clamp



VQ971H-16P/R

电动V型切断球阀
Electric V cutting ball valve



Q981F-16P/R

电动卫生级快装球阀
Quick install ball valve electric health level



Q991X-10U

电动UPVC双由令球阀
Electric UPVC double by ball valve

Q941F-16P/R

电动高平台法兰球阀

Electric High Platform Flange Ball Valve



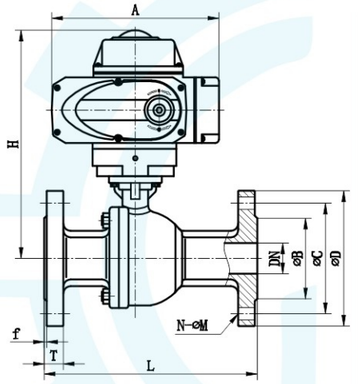

Q941F-16P/R
电动高平台法兰球阀

技术参数

介质温度：-20℃～+180℃
环境温度:-20℃～+60℃
公称压力:0~1.6MPa
控制电源：AC110V、AC220V
AC380V、DC24V
规格：DN15-DN200
阀体材质：CF8、CF8M
阀座材质：PTFE
阀杆材质:304
控制特点：开关型、调节型

Technical parameters

Medium temperature: - 20 °C ~ + 180 °C
Ambient temperature: - 20 °C ~ + 60 °C
Nominal pressure: 0 ~ 1.6 MPa
Control power: AC110V, AC220V
AC380V, DC24V
Specification: DN15 - DN200
The valve body material: CF8, CF8M
seat material:PTFE
Stem material: 304
Control features: switch model, external regulation

型 号 model	L	T	f	D	C	B	A	H	N-H	执行器 Actuator
DN15	130	14	2	95	65	45	160	178	4-Φ14	YL-05
DN20	140	15	2	105	75	54	160	185	4-Φ14	YL-05
DN25	150	16	2	115	85	65	160	188	4-Φ14	YL-05
DN32	165	16	2	135	100	78	160	197	4-Φ18	YL-05
DN40	180	17	2	145	110	85	196	212	4-Φ18	YL-10
DN50	200	18	2	160	125	100	196	240	4-Φ18	YL-10
DN65	220	18	2	180	145	120	256	294	4-Φ18	YL-20
DN80	250	18	2	195	160	135	256	306	8-Φ18	YL-20
DN100	280	20	2	215	180	155	256	321	8-Φ18	YL-20
DN125	320	22	3	245	210	185	256	420	8-Φ18	YL-40
DN150	360	24	3	280	240	210	256	445	8-Φ22	YL-60
DN200	400	26	3	335	295	265	280	510	12-Φ22	YL-200

D911F-16P/R

电动三片式螺纹球阀

Electric 3PC Threaded Ball Valve



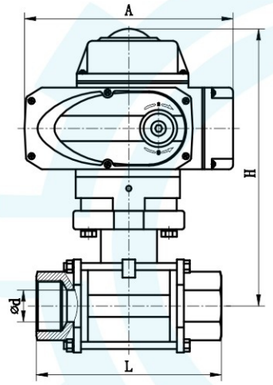

D911F-16P/R
电动三片式螺纹球阀

技术参数

介质温度：-20℃～+180℃
环境温度:-20℃～+60℃
公称压力:0~4.0MPa
控制电源：AC110V、AC220V
AC380V、DC24V
规格：DN15~DN100
阀体材质：CF8、CF8M
阀座材质：PTFE
阀杆材质:304
控制特点：开关型、调节型

Technical parameters

Medium temperature: - 20 °C ~ + 180 °C
Ambient temperature: - 20 °C ~ + 60 °C
Nominal pressure: 0 ~ 4.0 MPa
Control power: AC110V, AC220V
AC380V, DC24V
Specification: DN15 ~ DN100
The valve body material: CF8, CF8M
seat material:PTFE
Stem material: 304
Control features: switch model, external regulation

型 号 model	d	L	A	H	执行器 Actuator
1/2"	15	75	160	166	YL-05
3/4"	20	80	160	170	YL-05
1"	25	90	160	180	YL-05
1 1/4"	32	110	160	185	YL-05
1 1/2"	38	120	160	198	YL-05
2"	50	140	196	237	YL-10
2 1/2"	65	185	196	252	YL-10
3"	78	205	256	302	YL-20
4"	98	240	256	320	YL-20

Q981F-16P/R

电动卫生级快装球阀

Electric Sanitary Quick-install Ball Valve



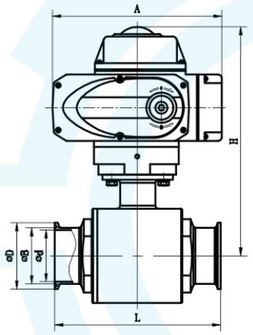

Q981F-16P/R
电动卫生级快装球阀

技术参数

介质温度：-20℃～+180℃
环境温度:-20℃～+60℃
公称压力:0~1.0MPa
控制电源：AC110V、AC220V
AC380V、DC24V
规格：Φ19-Φ159
阀体材质：CF8、CF8M
阀座材质：PTFE
阀杆材质:304
控制特点：开关型、调节型

Technical parameters

Medium temperature: - 20 °C ~ + 180 °C
Ambient temperature: - 20 °C ~ + 60 °C
Nominal pressure: 0 ~ 1.0 MPa
Control power: AC110V, AC220V
AC380V, DC24V
Specification: Φ19- Φ159
The valve body material: CF8, CF8M
seat material:PTFE
Stem material: 304
Control features: switch model, external regulation

型 号 model	L	d	D	A	H	执行器 Actuator
Φ19	108	16	50.5	160	173	YL-05
Φ25	112	22	50.5	160	178	YL-05
Φ32	125	29	50.5	160	185	YL-05
Φ38	135	35	50.5	160	194	YL-05
Φ45	150	42	64	160	216	YL-05
Φ51	160	48	64	196	240	YL-10
Φ57	170	53	77.5	196	245	YL-10
Φ63	178	59	77.5	196	258	YL-10
Φ76	220	72	91	196	265	YL-10
Φ89	240	85	106	256	285	YL-20
Φ102	270	97	119	256	294	YL-20
Φ114	320	108	130	256	305	YL-20
Φ133	400	125	145	256	322	YL-40
Φ159	480	150	172	256	350	YL-40

D971F-16Q

电动对夹蝶阀

Electric Wafer Butterfly Valve



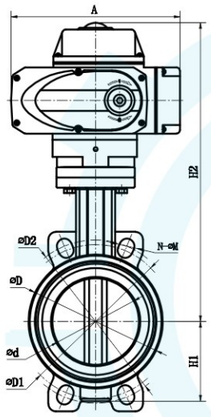

D971F-16Q
电动对夹蝶阀

技术参数

介质温度：-20℃～+150℃
环境温度:-20℃～+60℃
公称压力:0~1.0MPa
控制电源：AC110V、AC220V
AC380V、DC24V
规格：DN50-DN300
阀体材质：铸铁
阀板材质：WCB CFB CF8M
阀座材质：PTFE EPDM NBR FPM
阀杆材质:304
控制特点：开关型、调节型

Technical parameters

Medium temperature: - 20 °C ~ + 150 °C
Ambient temperature: - 20 °C ~ + 60 °C
Nominal pressure: 0 ~ 1.0 MPa
Control power: AC110V, AC220V
AC380V, DC24V
Specification: DN50~DN300
The valve body material: cast iron
The valve material: WCB CF8M CFB
seat material: EPDM, NBR FPM PTFE
Stem material: 304
Control features: switch model, external regulation

型 号 model	d	L	D	D1	D2	A	H1	H2	N-ΦM	执行器 Actuator
DN40	38	33	83	98.5	110	160	62	282	4-Φ18	YL-05
DN50	50	43	99	120	125	160	62	296	4-Φ18	YL-05
DN65	64	46	115	139.5	145	160	80	300	4-Φ18	YL-05
DN80	76	46	130	146	160	160	90	312	4-Φ19	YL-05
DN100	102	52	150	178	190.5	196	105	344	4-Φ19	YL-10
DN125	123	56	180	210	216	196	118	355	4-Φ22	YL-10
DN150	146	56	207	230	238	256	130	405	4-Φ22	YL-20
DN200	203	60	265	295	295	256	165	438	4-Φ22	YL-40
DN250	250	68	314	340	358	256	200	453	4-Φ26	YL-60
DN300	300	78	370	395	425	280	232	490	4-Φ26	YL-100

质量保证承诺和售后保修服务

1、公司生产的种类阀门严格按照国标GB, 美标ANSI, API, 日标 JIS, 英标BS, 德标DIN等标准设计制造。
2、主体材质化学成份和力学性能达到国家规定标准要求。
3、阀门承压件每台都进行无损探，伤保证符合JB/T6440X射线检验标准、JB/T6439磁粉探伤和JB/T6903超声波检验标准。
4、阀杆材质化学成份达到国家规定标准要求，光洁度达到国家标准要求，表面经抗蚀性氮化或调质处理，保证阀杆力学性能。
5、尺寸公差符合国家GB1800-1804S标准要求，零部件彩用数控机床加工并通配互换。
6、密封面采用堆焊，硬度达到国家GB/T12234-12236标准要求，宽度要求达到或超过国家标准，电站阀门密封面都经过着色探伤检验，符合JB/T6902标准要求。
7、整机装配前用煤油和防锈油经高压喷射清洗，试压后清除试验介质，喷上防锈油，内腔清洁度达到JB/T7748标准要求，符合阀门长期储存要求。
8、每台阀门经过严格检验与试验，所有的检验文件随机提供。
9、公司如特殊原因不能按期交货，罚违约金按订货总金额1%计算。
10、客户提货后在18个月内，因产品制造质量而导致密封式压不合格保证包换、包退并负责退回运费。

龙浒泉系列阀门，质量优秀，性能卓越。其任何一款阀门的出厂都经过生产检验，包装检验和出厂检验三道严格的检验的程序，确保了用户能享受到龙浒泉阀门完美的品质服务。但任何产品都难免有瑕疵，如果在您正确使用我司产品的基础上出现任何质量问题，我司承诺如下售后服务：
①1个月出现质量问题，包换；
②一年出现质量问题，包修；
③终身享受龙浒泉产品维护保养；
④我公司保证在接到用户提出异议后2小时内做出处理意见，若需要现场解决的，可派专业技术服务人员，并做到质量问题不解决服务人员不撤离，对每件用户反馈的产品质量问题及处理结果我公司将存档。

竭诚欢迎广大用户指导修正，请提出宝贵意见，参照改进，真诚希望我们之间合作愉快。

温州龙浒泉阀门科技有限公司

QUALITY ASSURANCE COMMITMENT AND AFTER-SALES WARRANTY SERVICE

1. The types of valves produced by the company are designed and manufactured in strict accordance with national standards
2. GB, American standard ANSI, API, Japanese standard JIS, British standard BS, German standard DIN and other standards.
3. The chemical composition and mechanical properties of the main material meet the national standard requirements.Non-destructive testing is carried out on each valve pressure-bearing piece, and the damage guarantee complies with JB / T6440 X-ray inspection standard, JB / T6439 magnetic particle inspection and JB / T6903 ultrasonic inspection standard.
4. The chemical composition of the valve stem material meets the national standard requirements, and the finish meets the national standard requirements. The surface is treated with anti-corrosive nitriding or tempering to ensure the mechanical properties of the valve stem.
5. The dimensional tolerance is in accordance with the national GB1800-1804S standard requirements, and the color parts are processed with CNC machine tools and interchanged wildly.
6. The sealing surface adopts surfacing welding, the hardness reaches the national GB / T12234-12236 standard requirements, and the width requirements meet or exceed the national standard. The power station valve sealing surface has passed the color inspection and meets the JB / T6902 standard requirements.
7. Before assembly, kerosene and anti-rust oil are used for high-pressure jet cleaning, the test medium is removed after pressure test, and anti-rust oil is sprayed. The cleanliness of the inner cavity reaches the requirements of JB / T7748 standard, which meets the long-term storage requirements of the valve.
8. Each valve undergoes rigorous inspection and testing, and all inspection documents are provided randomly.
9. If the company cannot deliver on time due to special reasons, the penalty for penalty shall be calculated as 1% of the total order amount.
10. Within 18 months after the customer picks up the goods, due to the quality of the product, the sealed pressure is not qualified to guarantee the replacement, return and return the freight.

Longhuquan series valves have excellent quality and outstanding performance. All of its valves are delivered through three strict inspection procedures: production inspection, packaging inspection and factory inspection, ensuring that users can enjoy the perfect quality service of Longhuquan Valve. However, any product will inevitably have defects. If there are any quality problems based on your correct use of our products, our company promises the following after-sales service:

①If there is a quality problem within one month, replacement will be guaranteed;

②If there is a quality problem in one year, repair is guaranteed;

③Enjoy the maintenance of Longhuquan products for life;

④Our company guarantees to make a handling opinion within 2 hours after receiving the objection from the user, if it needs to be solved on the spot, we can send professional technical servicesPersonnel, and ensure that the quality problem is not resolved, the service personnel will not be evacuated, and our company will respond to each product quality problem and the processing result of the user's feedbackArchive.

We sincerely welcome users to guide and revise, please provide valuable comments, refer to improvements, and sincerely hope that we will enjoy a pleasant cooperation.

WENZHOU LONGHUQUAN VALVE TECHNOLOGY CO., LTD.