气源处理元件
AIRLINE EQUIPMENT

方向控制元件
VALVES & MANIFOLDS

执行元件
ACTUATORS

气动接头
PNEUMATIC TUBE FITTINGS

TSPC COMPANY

Company profile

TSPC Company was established in 2003, now is composed of:

1) Ningbo TSPC Automation Co.,Ltd
   --Head quarter(sales and trading)
2) Fenghua TSPC Pneumatic Components Factory
   --Manufacture full range of pneumatic products
3) Fenghua TSPC machinery Co.,ltd
   --Manufacture non-standard fasteners and machinery parts

Our company is ISO-9001 certified, with a history of 13 years in providing Pneumatic Components such as Pulse solenoid valves,Herion solenoid valves,water/oil/gas solenoid valves,pneumatic control valves, mechanical valves,festo FRL,SMC FRL,AIRTAC FRL,pneumatic cylinders,pneumatic accessoires,ball valves , machinery parts such as stamping, machining, casting, plastic parts, oil seal and service at quite reasonable prices. Located in the coastal city of Ningbo, China, TSPC Company covers an area of 7,000 square meters with more than 100 employees.

With the support of our professional engineering team and well equipped research center, we are now capable of meeting your every selective requirement. Whenever you have an technical problem, we are always your best choice. We are striving to be one of the most successful industrial service providers in the world.

Quality is and will always be the priority of our work. TSPC focus on every detail of the products we provide. With the help of our very critical quality control system, we can make sure that the products delivered by us are precisely based on your requirements. We control our production and quality process according to ISO standard as well as PPAP III. We always submit samples according to ISIR.

We are now exporting more than 60% of our products to both the Europe and USA. And some of them finally go to OEM. No matter where you are, please do not hesitate to contact us -- we are just beside you.

TSPC will never be satisfied with our success in the past. We will continue to make a bright future!

TSPC, high performance, full satisfaction!







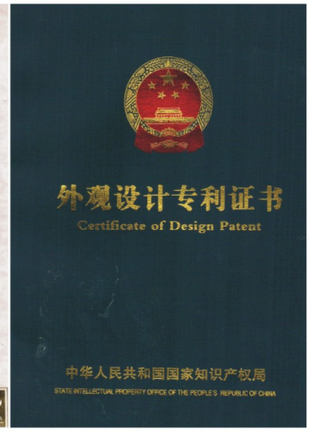

Oxygen Generator(Diaphram) Valves

NEW

New Pruduct



ZY-06B　ZY-08A2/3　ZY-08A　ZY-08B　ZY-08B1　ZY-08L

Specifcation

Type	Four Way-Two Position
Working Medium	Air(40μm Micron Filtered)
Acting Type	Internally Piloted Type
Working Pressure	0.035~0.35MPa
Working Temperature	-5~80℃
Insulation Grade	IP65

ZY-06B

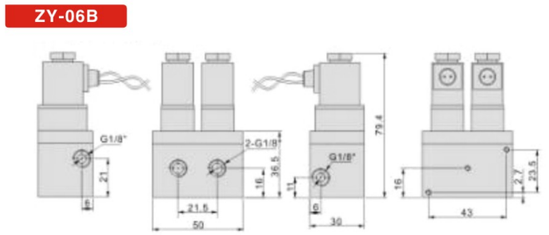

ZY-08A2/3

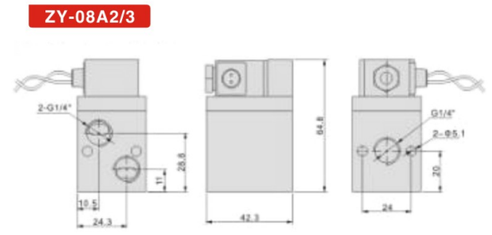

ZY-08A

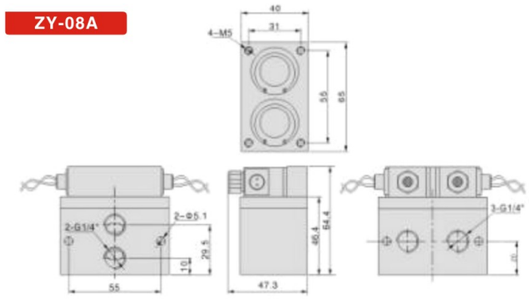

ZY-08B

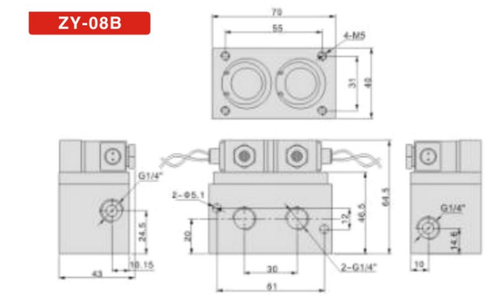

ZY-08B1

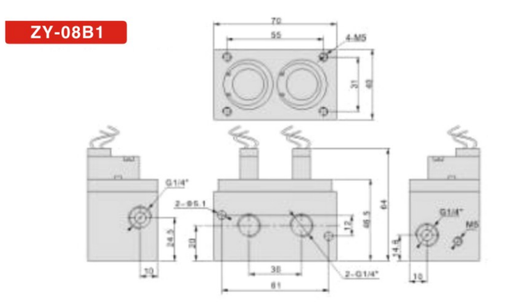

ZY-08L

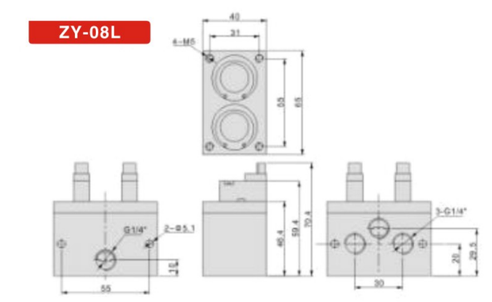

Ordering Code

FO	U	—	MINI	1/4	—	□	—	□	—	□
Series FO Series	**Function code** FR.L Combination		**Body** MINI MIDI MAXI	**Port Size** G1/8" G1/2" G1/4" G3/4" G3/8" G1"		**Grade of Filtration** Blank:40μm 5M:5μm		**Manometer** Blank:12bar 7:7bar		**Drain Type** Blank: Turnd Manually A:Auto Drain Type

The FOU consisted of FOFR and FOL,each unit can be ordered separately.

The FOF with water separator cleans the compressed air of fluid oil,condensation and dirt.Particles.For special application,the standard 40 μ m filter element may easily be replaced by a 5 μ m filter element.

The FOR maintain imputting constant operating pressure despite fluctuation in line pressure and the amount of air consumed.The proportional lubricator adds a regulated quantity of oil to the filtered air.The oil-mist content proportional to the flow and oil can be added during operation.The oil drop rate is controlled by the adjustable bolt.Normally,1to 12 drops/1000L of the air is sufficient



FOU–MINI

Specifcation

Service units		MINI			MIDI			MAXI	
Manual Drain	Working pressure:12bar,40μm	FOU-1/8-MINI	FOU-1/4-MINI	FOU-3/8-MINI	FOU-3/8-MIDI	FOU-1/2-MIDI	FOU-3/4-MIDI	FOU-3/4-MAXI	FOU-1-MAXI
	Working pressure:7bar,40μm	FOU-1/8-7-MINI	FOU-1/4-D-7-MINI	FOU-3/8-7-MINI	FOU-3/8-7-MIDI	FOU-1/2-7-MIDI	FOU-3/4-7-MIDI	FOU-3/4-7-MAXI	FOU-1-7-MAXI
	Working pressure:12bar,5μm	FOU-1/8-5M-MINI	FOU-1/4-5M-MINI	FOU-3/8-5M-MINI	FOU-3/8-5M-MIDI	FOU-1/2-5M-MIDI	FOU-3/4-5M-MIDI	FOU-3/4-5M-MAXI	FOU-1-5M-MAXI
Manometer	0~12bar	OMA-40-16-1/8			OMA-50-16-1/4				
	0~7bar	OMA-40-10-1/8			OMA-50-10-1/4				
Medium		Compressed air							
Features of structure		Sintered filter with water separator;MINI/MIDI:MAXI:Piston regulator;Diaphragm type regulator;Direct constant-density lubricator							
Mounting type		Pipe mounting or foot mounting							
Assembly position		Vertical ±5°							
Connection		G1/8"	G1/4"	G3/8"	G3/8"	G1/2"	G3/4"	G3/4"	G1"
Standard nominal flow rate	FOU-...(-A)	700	1000	1200	2000	2600	2600	7000	8000
	FOU-...-7-(-A)	800	1300	1500	2500	2800	2800	8500	8700
	FOU-...-5M-(-A)	600	850	1050	1700	1800	2100	6500	7200
Primary pressure	Manualcondensate drain	1~16bar							
	Automatic condensate drain	1.5~12bar							
Working pressure		0.5~12bar/0.5~7bar							
Min.Standard nominal flow rate		3 L/min			6 L/min			10 L/min	
Grade of filtration		40μm/5μm							
Capacity of condensate fluid		22ml							
Temperature range		0~60℃							
Materials information		Housing:Zinc die-casting;Filter bowl and oil bowl:PC;Metal bowl guard:Aluminum alloy;Sealing:NBR;Adjusting knob:POM							

Internal structure

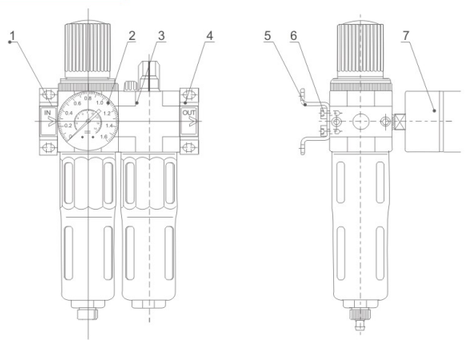

NO	Item	Material
1	Flange-IN	Zinc alloy
2	Filter + Regulator	
3	Lubricator	
4	Flange - OUT	Zinc alloy
5	Bracket	SPCC
6	Allen screw	S35C
7	Pressure gauge	

FOU Series Air Source Treatment Unit

Overall Dimensions

Graphic Symbol

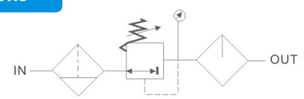

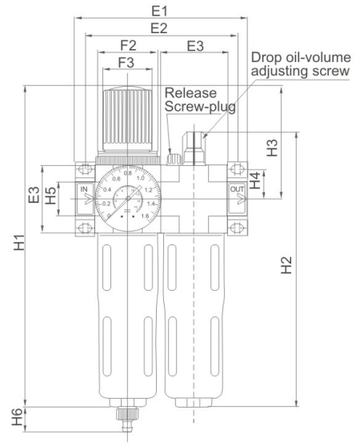

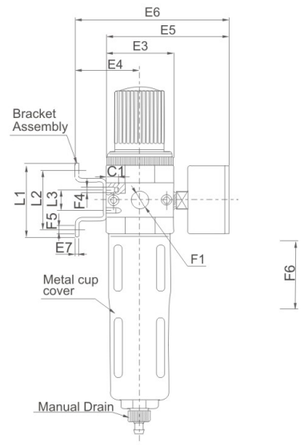

Dimension Sheet

Model	E1	E2	E3	E4	E5	E6	E7	F1	F2
FOU-...-MINI	104	92	40	39	76	95	2	G1/8",G1/4",G3/8"	M36×1.5
FOU-...-MIDI	140	125	55	47	93	112	3	G3/8",G1/2",G3/4"	M52×1.5
FOU-...-MAXI	162,182	146,157	66	53	104	124	3	G3/4",G1"	M52×1.5

Model	F3Φ	F4	F5Φ	F6Φ	L1	L2	L3	H1	H2	H3	H4	H5	H6
FOU-...-MINI	31	M4	4.5	41	44	35	11	194	169	69	17.5	20	15
FOU-...-MIDI	50	M5	5.5	52	71	60	22	250	206	97	24.5	32	15
FOU-...-MAXI	50	M5	5.5	53	71	60	22	272	226	80	24.5	32,40	15

Note: The Color Can Be Customized According to Your Requirement.

Flow diagram

Standard flow rate qn as a function of the output pressure p2

OU-1/4-MINI

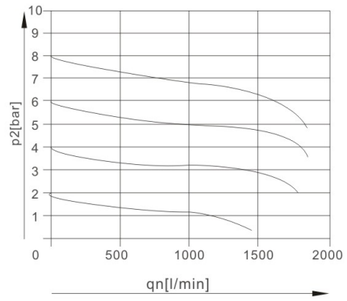

OU-1/2-MIDI

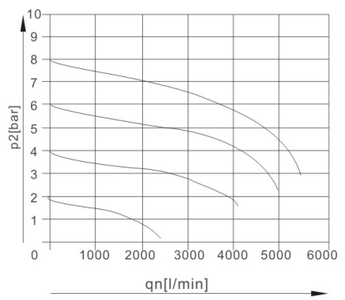

OU-1-MAXI

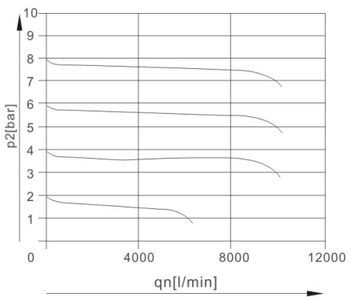

Primary pressure: p1=10 bar

Ordering Code

FO	FR	—	MINI	—	1/4	—	□	—	□	—	□
Series FO Series	**Function code** Filter&Regulator		**Body** MINI MIDI MAXI		**Port Size** G1/8" G1/2" G1/4" G3/4" G3/8" G1"		**Grade of Filtration** Blank:40μm 5M:5μm		**Manometer** Blank:12bar 7:7bar		**Drain Type** Blank: Turnd Manually A: Auto Drain Type

Filter and pressure regulator combine a single unit，and cleans the compressed air of fluid oil,condensation and dirt particles.For special application,the standard 40μm filter element may easily be replaced by a 5μm filter element.

The FOR maintain im putting constant operating pressure despite fluctuation in line pressure and the amount of air consumed.



FOFR–MINI

Specifcation

Filter regulators		MINI			MIDI			MAXI	
Manual Drain	Working pressure:12bar,40μm	FOFR-1/8-MINI	FOFR-1/4-MINI	FOFR-3/8-MINI	FOFR-3/8-MIDI	FOFR-1/2-MIDI	FOFR-3/4-MIDI	FOFR-3/4-MAXI	FOFR-1-MAXI
	Working pressure:7bar,40μm	FOFR-1/8-7-MINI	FOFR-1/4-D-7-MINI	FOFR-3/8-7-MINI	FOFR-3/8-7-MIDI	FOFR-1/2-7-MIDI	FOFR-3/4-7-MIDI	FOFR-3/4-7-MAXI	FOFR-1-7-MAXI
	Working pressure:12bar,5μm	FOFR-1/8-5M-MINI	FOFR-1/4-5M-MINI	FOFR-3/8-5M-MINI	FOFR-3/8-5M-MIDI	FOFR-1/2-5M-MIDI	FOFR-3/4-5M-MIDI	FOFR-3/4-5M-MAXI	FOFR-1-5M-MAXI
Manometer	0~12bar	OMA-40-16-1/8			OMA-50-16-1/4				
	0~7bar	OMA-40-10-1/8			OMA-50-10-1/4				
Medium		Compressed air							
Features of structure		Sintered filter with water separator;MINI/MID:Diaphragm type-regulator;MAXI:Piston regulator;							
Mounting type		Pipe mounting or foot mounting							
Assembly position		Vertical ±5°							
Connection		G1/8"	G1/4"	G3/8"	G3/8"	G1/2"	G3/4"	G3/4"	G1"
Standard nominal flow rate	FOFR-...	750	1400	1600	3100	3400	3400	9000	10000
	FOFR-...-7	900	1500	1700	3400	3900	3900	9500	16000
	FOFR-...-5M	650	1200	1350	2400	2500	2500	7300	7600
Primary pressure	Manualcondensate drain	1~16bar							
	Automatic condensate drain	1.5~12bar							
Working pressure		0.5~12bar/0.5~7bar							
Grade of filtration		40μm/5μm							
Max.Condensate Capacity		22ml							
Temperature range		0~60℃							
Materials information		Housing:Zinc die-casting;Filter bowl:PC;Metal bowl guard:Aluminum alloy;Sealing:NBR;Adjusting knob:POM							

Overall Dimensions

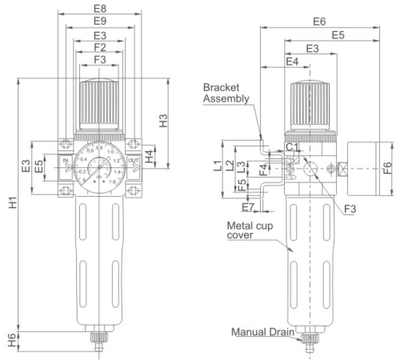

Graphic Symbol

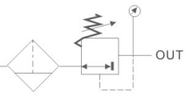

Model	E3	E4	E5	E6	E8	E9	F1	F2
FOFR-...-MINI	40	39	76	95	64	52	G1/8",G1/4",G3/8"	M36×1.5
FOFR-...-MIDI	55	47	93	112	85	70	G3/8",G1/2",G3/4"	M52×1.5
FOFR-...-MAXI	66	53	104	124	116	91	G3/4",G1"	M52×1.5

Model	F3Φ	F4	F5Φ	F6Φ	L1	L2	L3	H1	H3	H4	H5	H6
FOFR-...-MINI	31	M4	4.5	41	44	35	11	194	69	17.5	20	15
FOFR-...-MIDI	50	M5	5.5	52	73	60	22	250	98	24.5	32	15
FOFR-...-MAXI	50	M5	5.5	53	73	60	22	272	80	24.5	32,40	15

Internal structure

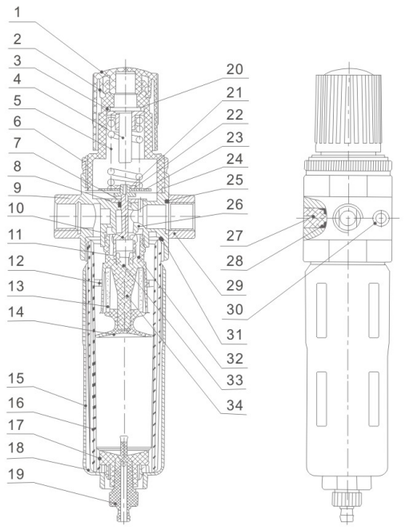

NO	Item	Material	NO	Item	Material
1	Pressure knob	POM	18	Inner joint	POM
2	Regulator cap	POM	19	Condensate drain	POM
3	Regulator nut	S35C	20	Wearing sheet	Insulation sheet
4	Adjusting spindle	S35C	21	OR Sheet	NBR
5	Pressure spring	SWC	22	Overflow base	6061-T6
6	Fixed ring	6061-T6	23	One part of diaphragm	SPCC
7	One part of membrane	PA6+G15	24	Diaphragm	NBR+Nylon Mesh
8	O-ring	NBR	25	O-ring	NBR
9	Flange-IN	Zinc alloy	26	OR Body	Zinc alloy
10	Spool	Brass	27	Plug	POM
11	O-ring	NBR	28	O-ring	NBR
12	Whirl wind impeller	POM	29	Flange-OUT	Zinc alloy
13	Filter element	PE	30	Allen screw	S35C
14	Manger	POM	31	O-ring	NBR
15	Metal bowl guard	Aluminum alloy	32	Spring	SWPB
16	Filter bowl	PC	33	Fasteners	Brass
17	O-ring	NBR	34	Filter element base	POM

Flow diagram

Standard flow rate qn as a function of the output pressure p2

OFR-1/4-MINI

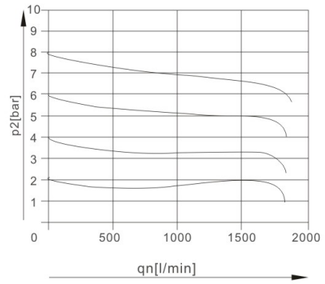

OFR-1/2-MIDI

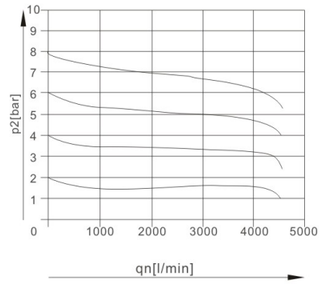

OFR-1-MAXI

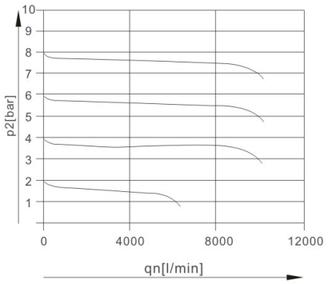

Primary pressure: p1=10 bar

Ordering Code

FO	R	—	MINI	—	1/4	—	□
Series FO Series	**Function code** Regulator		**Body** MINI MIDI MAXI		**Port Size** G1/8" G1/4" G3/8" G1/2" G3/4" G1"		**Manometer** Blank:12bar 7:7bar

The FOR maintain imputting constant operating pressure despite fluctuation in line pressure and the amount of air consumed.



FOR–MINI

Specifcation

Regulators		MINI			MIDI			MAXI	
Working pressure 12bar		FOR-1/8-MINI	FOR-1/4-MINI	FOR-3/8-MINI	FOR-3/8-MIDI	FOR-1/2-MIDI	FOR-3/4-MIDI	FOR-3/4-MAXI	FOR-1-MAXI
Working pressure 7bar		FOR-1/8-7-MINI	FOR-1/4-7-MINI	FOR-3/8-7-MINI	FOR-3/8-7-MIDI	FOR-1/2-7-MIDI	FOR-3/4-7-MIDI	FOR-3/4-7-MAXI	FOR-1-7-MAXI
Manometer	0~12bar	OMA-40-16-1/8			OMA-50-16-1/4				
	0~7bar	OMA-40-10-1/8			OMA-50-10-1/4				
Medium		Filttered,compressed air(lubricated or unlubricated)							
Features of structure		MINI/MIDI:Diaphragm type regulator;MAXI: Piston regulator							
Mounting type		Pipe/foot/Plate mounting							
Assembly position		Any							
Connection		G1/8"	G1/4"	G3/8"	G3/8"	G1/2"	G3/4"	G3/4"	G1"
Standard nominal flow rate	FOR-...	800	1500	1700	3200	3500	3500	11000	11500
	FOR-...-7-	1000	1600	1800	3300	4000	4500	12000	12500
Primary pressure		1~16bar							
Working pressure		0.5~12bar/0.5~7bar							
Temperature range		0~60℃							
Materials information		Housing:Zinc die-casting; Sealing:NBR; Adjusting knob:POM							

Overall Dimensions

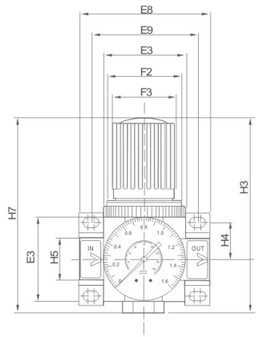

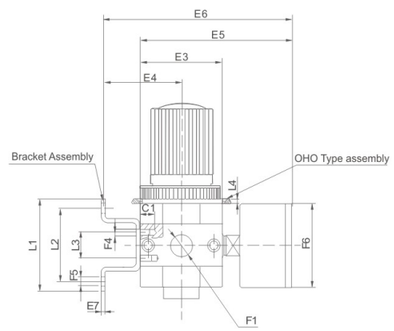

Graphic Symbol

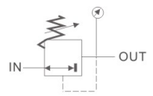

Dimension Sheet

Model	E3	E4	E5	E6	E8	E9	F1	F2	F3Φ	F4	F5Φ	F6Φ	L1	L2	L3	L4	H3	H4	H7
FOR-...-MINI	40	39	76	95	64	52	G1/8",G1/4",G3/8"	M36×1.5	31	M4	4.5	41	44	35	11	Max.3	69	17.5	96
FOR-...-MIDI	55	47	93	112	85	70	G3/8",G1/2",G3/4"	M52×1.5	50	M5	5.5	52	73	60	22	Max.5	98	24.5	96
FOR-...-MAXI	66	53	104	124	96,116	80,91	G3/4",G1"	M52×1.5	31	M5	5.5	53	73	60	22	Max.4	80	24.5	96

Internal structure

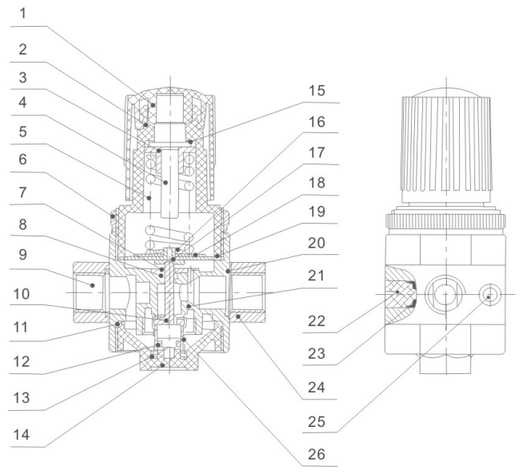

NO	Item	Material
1	Pressure knob	POM
2	Regulator cap	POM
3	Regulator nut	S35C
4	Adjusting spindle	S35C
5	Pressure spring	SWC
6	Fixed ring	6061-T6
7	One part of membrane	NBR
8	O-ring	NBR
9	Flange-IN	Zinc alloy
10	Spool	Brass
11	O-ring	NBR
12	O-ring	NBR
13	Fasteners	Brass
14	Locker cover	Zinc alloy
15	Wearing sheet	Insulation sheet
16	OR Sheet	NBR
17	Overflow base	6061-T6
18	One part of diaphragm	SPCC
19	Diaphragm	NBR+Nylon Mesh
20	O-ring	NBR
21	OR Body	Zinc alloy
22	Plug	POM
23	O-ring	NBR
24	Flange-OUT	Zinc alloy
25	Allen screw	S35C
26	Spring	SWPB

Flow diagram

Standard flow rate qn as a function of the output pressure p2

OR-1/4-MINI

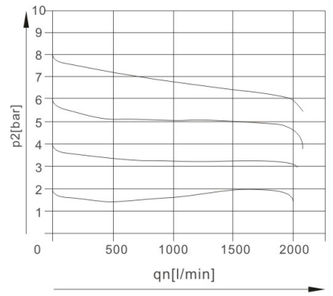

OR-1/2-MIDI

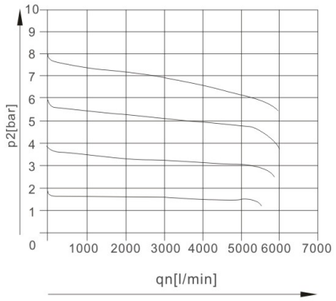

OR-1-MAXI

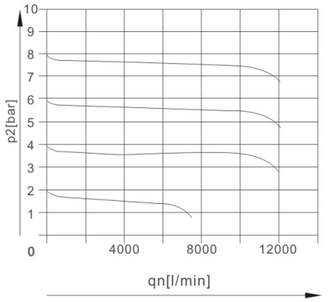

Primary pressure: p1=10 bar

FOF Series Air Filter

Ordering Code

FO	F	—	MINI	1/4	—	□	—	□

Series
FO Series

Function code
Filter

Body
MINI
MIDI
MAXI

Port Size
G1/8"
G1/4"
G3/8"
G1/2"
G3/4"
G1"

Grade of Filtration
Blank:40μm
5M:5μm

Drain Type
Blank: Turnd Manually
A: Auto Drain Type

The OF with water separator cleans the compressed air of fluid oil,condensation and dirt particles,for special application,the standard 40 μ m filter element may easily be replaced by a 5 μ m filter relement.



FOF–MINI

Specifcation

Filters		MINI			MIDI			MAXI	
40μm	Manual Drain	FOF-1/8-MINI	FOF-1/4-MINI	FOF-3/8-MINI	FOF-3/8-MIDI	FOF-1/2-MIDI	FOF-3/4-MIDI	FOF-3/4-MAXI	FOF-1-MAXI
5μm		FOF-1/8-5M-MINI	FOF-1/4-5M-MINI	FOF-3/8-5M-MINI	FOF-3/8-5M-MIDI	FOF-1/2-5M-MIDI	FOF-3/4-5M-MIDI	FOF-3/4-5M-MAXI	FOF-1-5M-MAXI
Medium		Compressed air							
Features of structure		Sintered filter with water spartor							
Mounting type		Pipe mounting or foot mounting							
Assembly position		Vertical ±5°							
Connection		G1/8"	G1/4"	G3/8"	G3/8"	G1/2"	G3/4"	G3/4"	G1"
Standard nominal flow rate	OF-...	1000	1200	1400	2700	3000	3000	5000	5300
	OF-...-5M	600	950	1100	1800	1900	1900	3200	3300
Primary pressure	Manual drain	1~16bar							
Grade of filtration		40μm/5μm							
Max.condensate capacity		22ml							
Temperature range		0~60℃							
Materials information		Housing:Zinc die-casting;Filter bowl :PC;Metal bowl guard: Aluminum alloy;Sealing:NBR							

Overall Dimensions

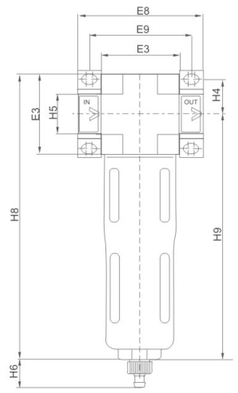

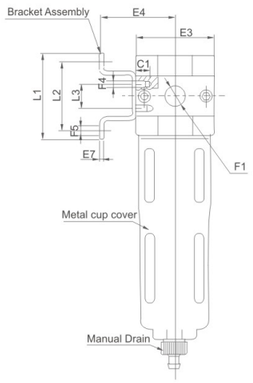

Graphic Symbol



Dimension Sheet

Model	E3	E4	E7	E8	E9	F1	F4	F5Φ	L1	L2	L3	H4	H5	H6	H8	H9
FOF-...-MINI	40	39	2	64	52	G1/8",G1/4",G3/8"	M4	4.5	44	35	11	17.5	20	15	144	124
FOF-...-MIDI	55	47	3	85	70	G1/8",G1/2",G3/4"	M5	5.5	71	60	22	30	32	15	180	153
FOF-...-MAXI	66	53	3	96,116	80,91	G3/4",G1"	M5	5.5	71	60	22	30	32,40	15	203	170

Internal structure

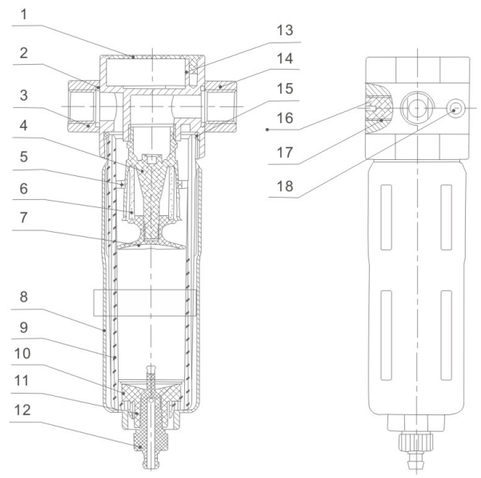

NO	Item	Material
1	Ornament cover(round)	POM
2	O-ring	NBR
3	Flange-IN	Zinc alloy
4	Filter element base	POM
5	Whirl wind impeller	POM
6	Filter element	PE
7	Manger	POM
8	Metal bowl guard	Aluminum alloy
9	Filter bowl	PC
10	O-ring	NBR
11	Inner joint	POM
12	Condensate drain	POM
13	OF Body	Zinc alloy
14	Flange-OUT	Zinc alloy
15	O-ring	NBR
16	Plug	POM
17	O-ring	NBR
18	Allen screw	S35C

Flow diagram

Standard flow rate qn as a function of the output pressure p2

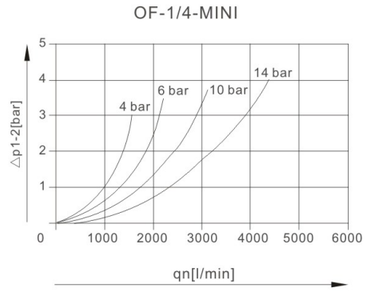

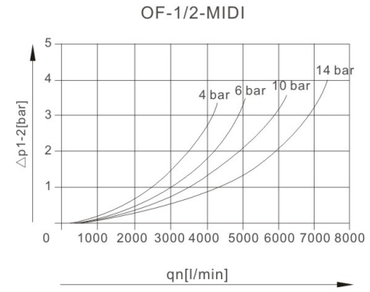

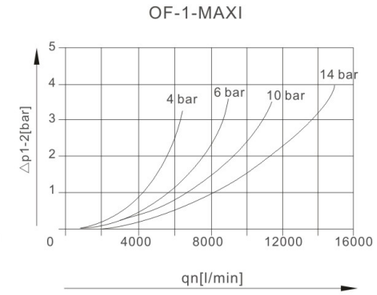

Primary pressure: p1=10 bar

Ordering Code

FO	L	—	MINI	—	1/4
Series FO Series	**Function code** Lubricator		**Body** MINI MIDI MAXI		**Port Size** G1/8" G1/2" G1/4" G3/4" G3/8" G1"

The direct constant-density lubricator add regulatd quantity oil to the compressed air.A valve maintains oil mist content proportional to the compressed oil flow.

The pressure drop that occurs when the air flow through a sight feed oil cup delives oil from the bowl to the sight oil indicator.The drop of the oil flows into the air channel when it is atomized.

The oil drop rate is controlled by means of the regulating screw.Normally,1 to 12 drops/1000L of the air is sufficient.



FOL–MINI

Specifcation

Lubricators	MINI			MIDI			MAXI	
	FOL-1/8-MINI	FOL-1/4-MINI	FOL-3/8-MINI	FOL-3/8-MIDI	FOL-1/2-MIDI	FOL-3/4-MIDI	FOL-3/4-MAXI	FOL-1-MAXI
Medium	Compressed air							
Features of structure	Sintered filter with water separator The direct Constant-density Lubricator							
Mounting type	Pipe mounting or foot mounting							
Assembly position	Vertical ±5°							
Connection	G1/8"	G1/4"	G3/8"	G3/8"	G1/2"	G3/4"	G3/4"	G1"
Standard nominal flow rate	1300	2300	2700	5500	6100	6300	8400	9000
Max.Working pressure	16bar							
Min.Standard nominal flow rate	3 L/min			6 L/min			10 L/min	
Max.condensate capacity	22ml							
Temperature range	0~60℃							
Materials information	Housing:Zinc die-casting;Oil bowl and Drop cap :PC;Metal bowl guard:Aluminum alloy;Sealing:NBR							
Recommended oil	ISO VG 32 or the same grade							

Overall Dimensions

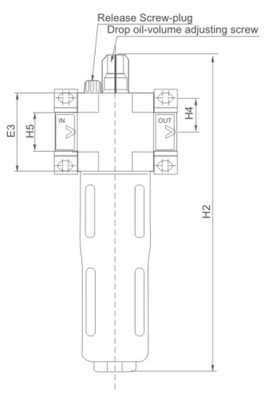

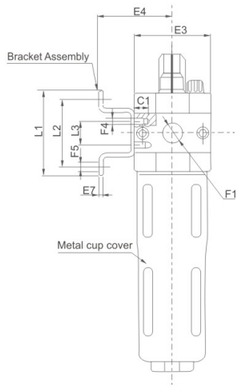

Graphic Symbol



Dimension Sheet

Model	E3	E4	E7	F1	F4	F5Φ	L1	L2	L3	H4	H5
FOL-...-MINI	40	39	2	G1/8",G1/4",G3/8"	M4	4.5	44	35	11	17.5	20
FOL-...-MIDI	55	47	3	G1/8",G1/2",G3/4"	M5	5.5	73	60	22	30	32
FOL-...-MAXI	66	53	3	G3/4",G1"	M5	5.5	73	60	22	30	32,40

Internal structure

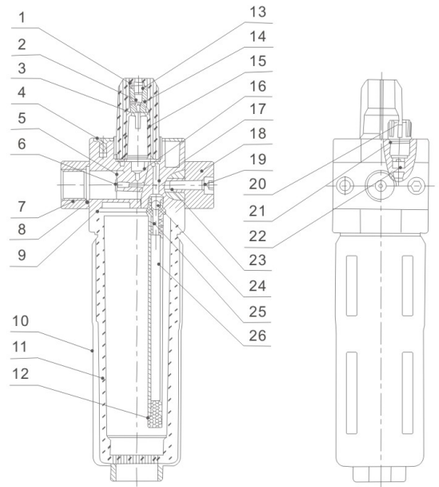

NO	Item	Material
1	Upper glass	PC
2	Adjust screw	Brass
3	O-ring	NBR
4	Ornament cover(circular)	PO
5	Windshield chip	NBR
6	Windshield base	Brass
7	Flange-IN	Zinc alloy
8	O-ring	NBR
9	O-ring	NBR
10	Metal bowl guard	Aluminum alloy
11	Lubricator bowl	PC
12	Oil-filter plup	Brass powder sintered
13	O-ring	NBR
14	Screw base	Brass
15	Oil dropping	PC
16	Seal piece	NBR
17	OL Body	Zinc alloy
18	Flange-OUT	Zinc alloy
19	Allen screw	S35C
20	Bleeder screw	POM
21	O-ring	NBR
22	Valve pin	Brass
23	Double-end bolt	SUS
24	Steel ball	SUS304
25	Oil tube connection	POM
26	Oil tube	PU

Flow diagram

Standard flow rate qn as a function of the output pressure p2

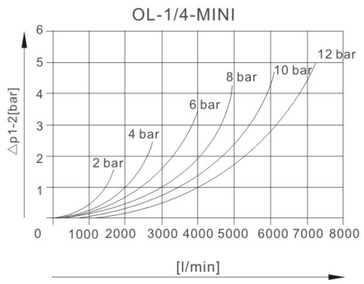

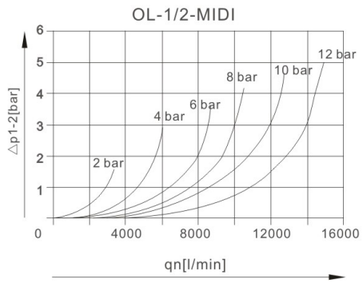

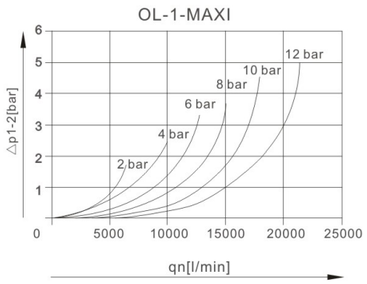

Primary pressure: p1=10 bar

Ordering Code

FA	C	4000	—	04	□	□
Series FA series	**Function code** F.R.L Comblnation	**Body Size** 1000 2000 3000 4000 5000		**Port Size** M5:M5×0.8 01:G1/8" 02:G1/4" 03:G3/8" 04:G1/2" 06:G3/4" 10:G1"	**Drain Type** Blank:Manual Drain Type D:Auto Drain Type (Available for 2000 or above)	**Metal Cup** U: With Iron Cup L: With Aluminum Cup (Available for 2000)

Graphic Symbol 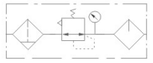



FAC5000–10



FAC4000–04



FAC2000–02



FAC1000–M5

Specifcation

Model		FAC1000 -M5	FAC2000 -01	FAC2000 -02	FAC3000 -02	FAC3000 -03	FAC4000 -03	FAC4000 -04	FAC4000 -06	FAC5000 -06	FAC5000 -10
Rated Flow(L/min)		90	500	500	2000	2000	4000	4000	4500	5000	5000
Port Size		M5	G1/8"	G1/4"	G1/4"	G3/8"	G3/8"	G1/2"	G3/4"	G3/4"	G1"
Filter Precision		25 μ									
Highest Working Pressure		1.0MPa									
Ensured pressure Resistance		1.5MPa									
Operating Temperature Range		5~60℃									
Range of Adjustable Pressure		0.05~0.7MPa	0.05~0.85MPa								
Recommended Oil Use		ISO VG 32									
Container Material		Polycarbonate									
Protective Cover		Not Available			Available						
Drain Function		Differential Drain			Differential Drain/Automatic Drain						
Valve Type		With Over flow									
Composing Elements	Filter	FAF1000-M5	FAF2000-01	FAF2000-02	FAF3000-02	FAF3000-03	FAF4000-03	FAF4000-04	FAF4000-06	FAF5000-06	FAF5000-10
	Regulator	FAR1000-M5	FAR2000-01	FAR2000-02	FAR3000-02	FAR3000-03	FAR4000-03	FAR4000-04	FAR4000-06	FAR5000-06	FAR5000-10
	Lubricator	FAL1000-M5	FAL2000-01	FAL2000-02	FAL3000-02	FAL3000-03	FAL4000-03	FAL4000-04	FAL4000-06	FAL5000-06	FAL5000-10

■ Note:We have upgraded Oil Drop Accessories on Lubricator of XA series 2000-5000 same to the XO series.

FAC1000~5000 Series Air Source Treatment Unit(F.R.L Combination)
AIRLINE EQUIPMENT 气源处理元件

Overall Dimensions

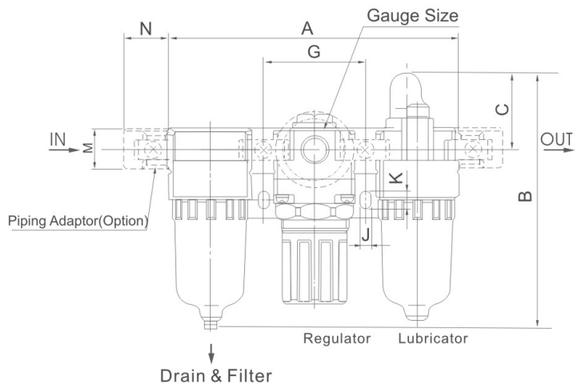

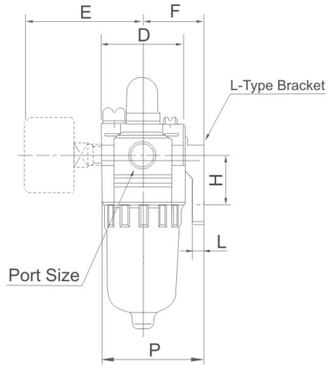

FAC1000~2000

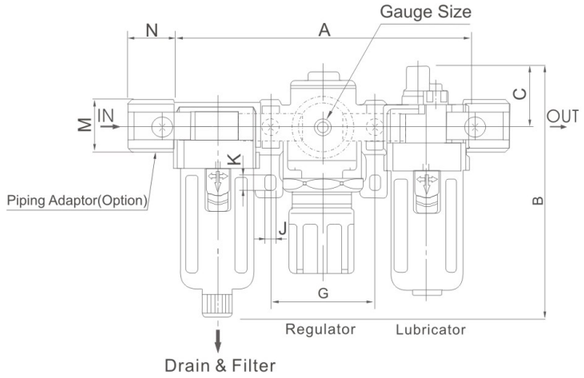

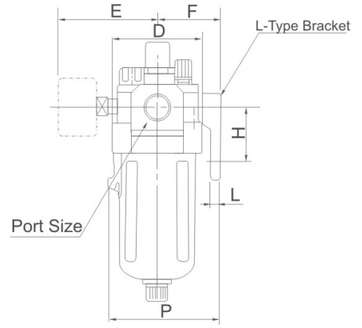

FAC3000~5000

Dimension Sheet

Model	Port Size(G)	A	B	C	D	E	F	G	H	J	K	L	M	N	P
FAC1000	M5	91	84.5	25.5	25	26	25	33	20	4.5	7.5	5	17.5	16	38.5
FAC2000	G1/8" ~G1/4"	140	125	38	40	56.8	30	50	24	5.5	8.5	5	22	23	50
FAC3000	G1/4" ~G3/8"	181	156.5	38	53	60.8	41	64	35	7	11	7	34.2	26	70.5
FAC4000	G3/8" ~1/2"	238	191.5	41	70	65.5	50	84	40	9	13	7	42.2	33	88
FAC4000-06	G3/4"	253	193	40.5	70	69.5	50	89	40	9	13	7	46.2	36	88
FAC5000	G3/4" ~G1"	300	271.5	48	90	75.5	70	105	50	12	16	10.5	55.5	40	115

Ordering Code

FA	C	4010	—	04	□	□
Series FA series	**Function code** F.R.L Comblnation	**Body Size** 1010 2010 3010 4010 5010		**Port Size** M5:M5×0.8 01:G1/8" 02:G1/4" 03:G3/8" 04:G1/2" 06:G3/4" 10:G1"	**Drain Type** Blank:Manual Drain Type D:Auto Drain Type (Available for 2000 or above)	**Metal Cup** U: With Iron Cup L: With Aluminum Cup (Available for 2000)

Graphic Symbol 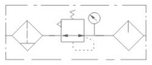



FAC5010–10



FAC4010–04



FAC2010–02



FAC2000–02L

Specifcation

Model		FAC1010 -M5	FAC2010 -01	FAC2010 -02	FAC3010 -02	FAC3010 -03	FAC4010 -03	FAC4010 -04	FAC4010 -06	FAC5010 -06	FAC5010 -10
Rated Flow(L/min)		90	500	500	1700	1700	3000	3000	3000	4000	4000
Port Size		M5	G1/8"	G1/4"	G1/4"	G3/8"	G3/8"	G1/2"	G3/4"	G3/4"	G1"
Filter Precision		25μ									
Highest Working Pressure		1.0MPa									
Ensured pressure Resistance		1.5MPa									
Operating Temperature Range		5~60℃									
Range of Adjustable Pressure		0.05~0.7MPa	0.05~0.85MPa								
Recommended Oil Use		ISO VG 32									
Container Material		Polycarbonate									
Protective Cover		Not Available	Available								
Drain Function		Differential Drain	Differential Drain,Automatic Drain								
Valve Type		With Over flow									
Composing Elements	Filter&Regulator	FAW1000-M5	FAW2000-01	FAW2000-02	FAW3000-02	FAW3000-03	FAW4000-03	FAW4000-04	FAW4000-06	FAW5000-06	FAW5000-10
	Lubricator	FAL1000-M5	FAL2000-01	FAL2000-02	FAL3000-02	FAL3000-03	FAL4000-03	FAL4000-04	FAL4000-06	FAL5000-06	FAL5000-10

■ Note:We have upgraded Oil Drop Accessories on Lubricator of XA series 2000-5000 same to the XO series.

Overall Dimensions

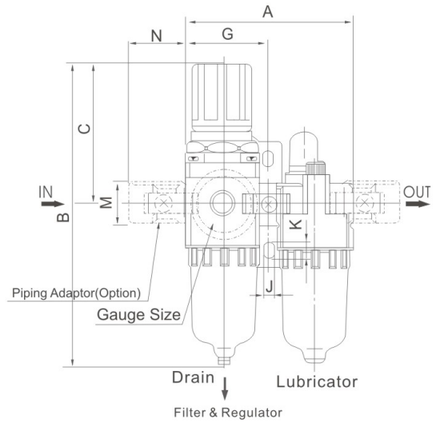

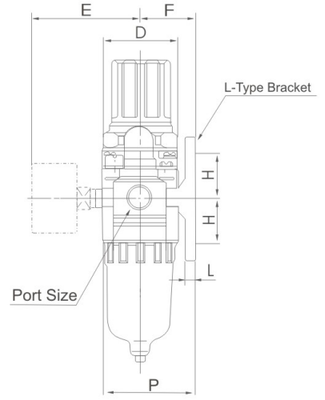

FAC1010~2010

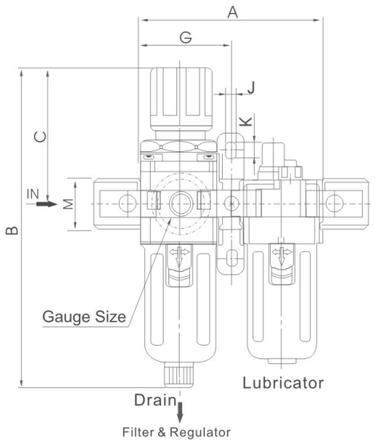

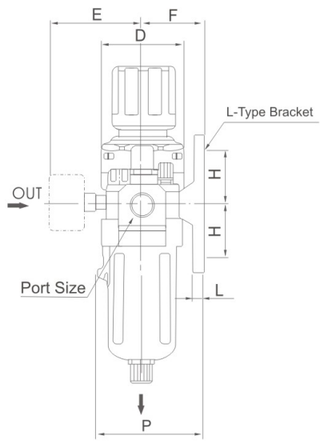

FAC3010~5010

Dimension Sheet

Model	Port Size(G)	A	B	C	D	E	F	G	H	J	K	L	M	N	P
FAC1010	M5	58	109.5	50.5	25	26	25	29	20	4.5	7.5	5	17.5	16	38.5
FAC2010	G1/8" ~G1/4"	90	164.5	78	40	56.8	30	45	24	5.5	8.5	5	22	23	50
FAC3010	G1/4" ~G3/8"	117	211	92.5	53	60.8	41	58.5	35	7	11	7	34.2	26	70.5
FAC4010	G3/8" ~1/2"	154	262	112	70	70.5	50	77	40	9	13	7	42.2	33	88
FAC4010-06	G3/4"	164	267	114	70	70.5	50	82	40	9	13	7	46.2	36	88
FAC5010	G3/4" ~G1"	195	338	116	90	75.5	69.8	97.5	50	12	16	10.5	55.5	40	115

FAF1000~5000 Series Air Filter

Ordering Code

FA	F	4000	—	04	□	□
Series	Function code	Body Size		Port Size	Drain Type	Metal Cup
FA series	Filter	1000 2000 3000 4000 5000		M5:M5×0.8 01:G1/8" 02:G1/4" 03:G3/8" 04:G1/2" 06:G3/4" 10:G1"	Blank:Manual Drain Type D:Auto Drain Type (Available for 2000 or above)	U: With Iron Cup L: With Aluminum Cup (Available for 2000)

Graphic Symbol





FAF5000–10 FAF4000–04 FAF2000–02

Specifcation

Model	FAF1000 -M5	FAF2000 -01	FAF2000 -02	FAF3000 -02	FAF3000 -03	FAF4000 -03	FAF4000 -04	XAF4000 -06	FAF5000 -06	FAF5000 -10
Rated Flow(L/min)	110	750	750	1500	1500	4000	4000	6000	7000	7000
Port Size	M5	G1/8"	G1/4"	G1/4"	G3/8"	G3/8"	G1/2"	G3/4"	G3/4"	G1"
Filter Precision	25 μ									
Highest Working Pressure	1.0MPa									
Ensured pressure Resistance	1.5MPa									
Operating Temperature Range	5~60℃									
Container Material	Polycarbonate									
Protective Cover	Not Available			Available						
Drain Function	Differential Drain			Differential Drain,Automatic Drain						

Overall Dimensions

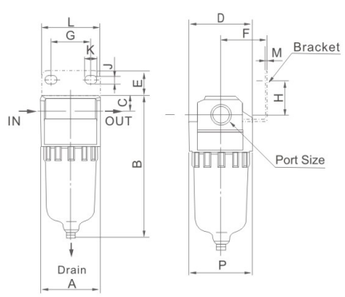

FAF1000~2000

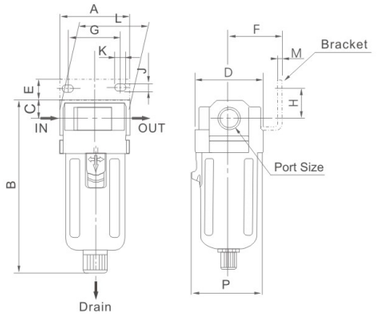

FAF3000~4000

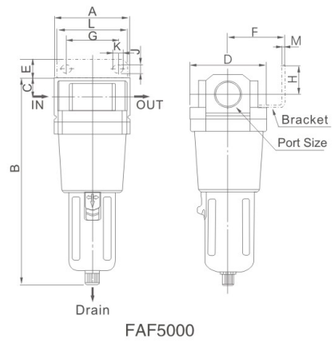

FAF5000

Dimension Sheet

Model	Port Size(G)	A	B	C	D	E	F	G	H	J	K	L	M	P
FAF1000	M5	25	66	7	25	-	-	-	-	-	-	-	-	26.5
FAF2000	G1/8" ~G1/4"	40	97.5	11	40	17	30	27	22	5.4	8.4	40	2.3	40
FAF3000	G1/4" ~G3/8"	53	132.5	14	53	16	41	40	23	6.5	8	53	2.3	56
FAF4000	G3/8" ~1/2"	70	168.5	18	70	17	50	54	26	8.5	10.5	70	2.3	73
FAF4000-06	G3/4"	75	172.5	20	70	14	50	54	25	8.5	10.5	70	2.3	73
FAF5000	G3/4" ~G1"	90	247.5	24	90	23	66.5	66	35	11	13	90	3.2	90

FAR 1000~5000 Series Regulator

Ordering Code

FA	R	4000	—	04
Series	Function code	Specification Code		Port Size
FA series	Regulator	1000 2000 3000 4000 5000		M5:M5×0.8 01:G1/8" 02:G1/4" 03:G3/8" 04:G1/2" 06:G3/4" 10:G1"

Graphic Symbol

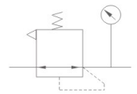



FAR5000–10 FAR4000–04 FAR2000–02

Specifcation

Model	FAR1000 -M5	FAR2000 -01	FAR2000 -02	FAR3000 -02	FAR3000 -03	FAR4000 -03	FAR4000 -04	FAR4000 -06	FAR5000 -06	FAR5000 -10
Rated Flow	100	550	550	2500	2500	6000	6000	6000	8000	8000
Port Size	M5	G1/8"	G1/4"	G1/4"	G3/8"	G3/8"	G1/2"	G3/4"	G3/4"	G1"
Highest Working Pressure	1.0MPa									
Ensured pressure Resistance	1.5MPa									
Operating Temperature Range	5~60℃									
Range of Adjustable Pressure	0.05~0.7MPa	0.05~0.85MPa								
Valve Type	With Overflow									

Overall Dimensions

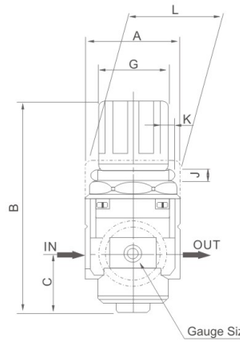

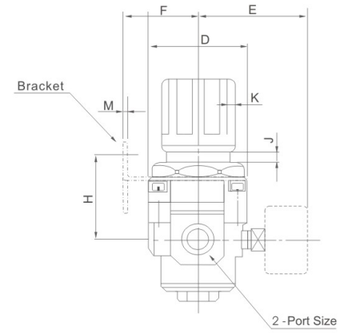

FAR1000~5000

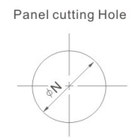

AR1000~3000:Max3.5
AR4000~5000:Max5

Dimension Sheet

Model	Port Size(G)	A	B	C	D	E	F	G	H	J	K	L	M	N
FAR1000	M5	25	61.5	11	25	26	25	28	30	4.5	6.5	40	2	20.5
FAR2000	G1/8" ~G1/4"	40	95	17	40	56.8	30	34	44	5.4	15.4	55	2.3	33.5
FAR3000	G1/4" ~G3/8"	53	127.5	35	53	60.8	41	40	46	6.5	8	53	2.3	42.5
FAR4000	G3/8" ~1/2"	70	149.5	37.5	70	65.5	50	54	54	8.5	10.5	70	2.3	52.5
FAR4000-06	G3/4"	75	154	40.5	70	69.5	50	54	56	8.5	10.5	70	2.3	52.5
FAR5000	G3/4" ~G1"	90	168	48	90	75.5	70	66	65.8	11	13	90	3.2	52.5

AIRLINE EQUIPMENT 气源处理元件

FAW 1000~5000 Series Filter & Regulator

Ordering Code

FA	W	4000	—	04	□	□

Series
FA series

Function code
Filter & Regulator

Specification Code
1000
2000
3000
4000
5000

Port Size
M5:M5×0.8
01:G1/8"
02:G1/4"
03:G3/8"
04:G1/2"
06:G3/4"
10:G1"

Drain Type
Blank:Manual Drain Type
D:Auto Drain Type (Available for 2000 or above)

Metal Cup
U: With Iron Cup
L: With Aluminum Cup
(Available for 2000)

Graphic Symbol

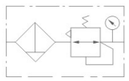



FAW5000–10 FAW4000–04 FAW2000–02

Specifcation

Model	FAW1000-M5	FAW2000-01	FAW2000-02	FAW3000-02	FAW3000-03	FAW4000-03	FAW4000-04	FAW4000-06	FAW5000-06	FAW5000-10
Rated Flow(L/min)	100	550	550	2000	2000	4000	4000	4500	5500	5500
Port Size	M5	G1/8"	G1/4"	G1/4"	G3/8"	G3/8"	G1/2"	G3/4"	G3/4"	G1"
Filter Precision	25 μ									
Highest Working Pressure	1.0MPa									
Ensured pressure Resistance	1.5MPa									
Operating Temperature Range	5~60℃									
Range of Adjustable Pressure	0.05~0.7MPa		0.05~0.85MPa							
Container Material	Polycarbonate									
Protective Cover	Not Available		Available							
Drain Function	Differential Drain		Differential Drain,Automatic Drain							
Valve Type	With Overflow									

Overall Dimensions

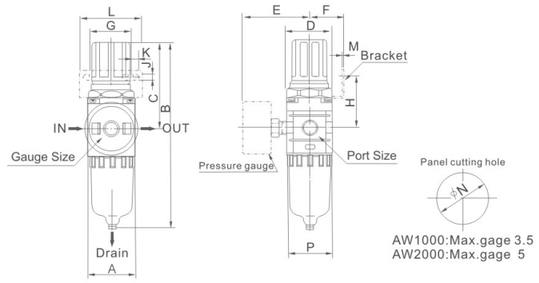

FAW1000~2000

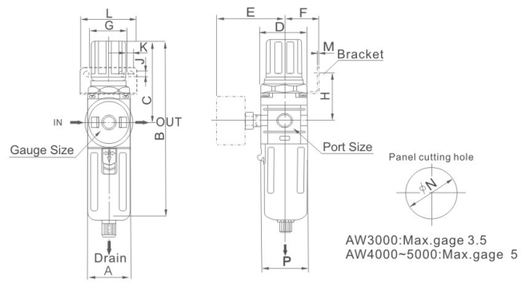

FAW3000~5000

Dimension Sheet

Model	Port Size(G)	A	B	C	D	E	F	G	H	J	K	L	M	N	P
FAW1000	M5	25.	109.5	50.5	25	26	25	28	30	4.5	6.5	40	2	20.5	28
FAW2000	G1/8" ~G1/4"	40	164.5	78	40	56.8	30	34	43.5	5.4	15.4	55	2.3	33.5	40
FAW3000	G1/4" ~G3/8"	53	211	92.5	53	60.8	41	40	46	6.5	8	53	2.3	42.5	56
FAW4000	G3/8" ~1/2"	70	262	112	70	70.5	50	54	53.5	8.5	10.5	70	2.3	52.2	73
FAW4000-06	G3/4"	75	267	114	70	70.5	50	54	55.5	8.5	10.5	70	2.3	52.5	73
FAW5000	G3/4" ~G1"	90	338	116	90	75.5	69.8	54	62	8.5	10.5	70	3.2	52.5	90

FAL 1000~5000 Series Lubricator

Ordering Code

FA	L	4000	04	□

Series
FA series

Function code
Lubricator

Specification Code
1000
2000
3000
4000
5000

Port Size
M5:M5×0.8
01:G1/8"
02:G1/4"
03:G3/8"
04:G1/2"
06:G3/4"
10:G1"

Metal Cup
U: With Iron Cup
L: With Aluminum Cup
(Available for 2000)

Graphic Symbol

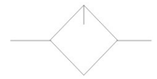



FAL5000–10 FAL4000–04 FAL2000–02

Specifcation

Model	FAL1000-M5	FAL2000-01	FAL2000-02	FAL3000-02	FAL3000-03	FAL4000-03	FAL4000-04	FAL4000-06	FAL5000-06	FAL5000-10
Rated Flow	95	800	800	1700	1700	5000	5000	6300	7000	9000
Port Size	M5	G1/8"	G1/4"	G1/4"	G3/8"	G3/8"	G1/2"	G3/4"	G3/4"	G1"
Highest Working Pressure	1.0MPa									
Ensured pressure Resistance	1.5MPa									
Operating Temperature Range	5~60℃									
Recommended Oil Use	ISO VG 32									
Container Material	Polycarbonate									
Protective Cover	Not Available		Available							

Overall Dimensions

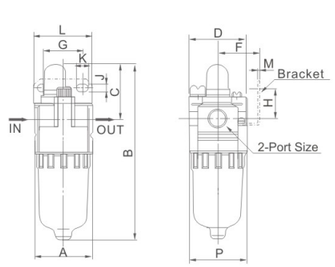

FAL1000~2000

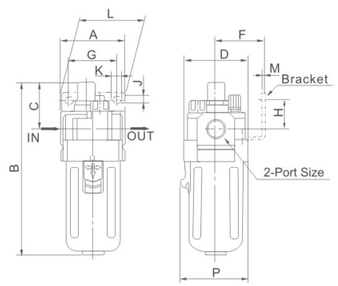

FAL3000~4000

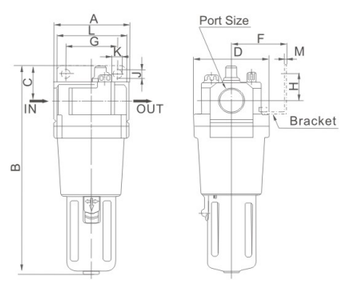

FAL5000

Dimension Sheet

Model	Port Size(G)	A	B	C	D	F	G	H	J	K	L	M	P
FAL1000	M5	25	81.5	25.5	25	-	-	-	-	-	-	-	27
FAL2000	G1/8" ~G1/4"	40	122	38	40	30	27	23	5.4	8.4	40	2.3	40
FAL3000	G1/4" ~G3/8"	53	142	38	53	41	40	23	6.5	8	53	2.3	56
FAL4000	G3/8" ~1/2"	70	177	41	70	50	54	26	8.5	10.5	70	2.3	73
FAL4000-06	G3/4"	75	177	39	70	50	54	25	8.5	10.5	70	2.3	73
FAL5000	G3/4" ~G1"	90	254	45	90	66.5	66	35	11	13	90	3.2	90

■ Note:We have upgraded Oil Drop Accessories on Lubricator of XA series 2000-5000 same to the XO series.

AIRLINE EQUIPMENT 气源处理元件

AC,BC Series Air Source Treatment Unit(F.R.L Combination)

Ordering Code

BC — 3000 — □

Series
AC:Small Size
BC:Middle Size

Port Size
1500:G1/8"
2000:G1/4"
3000:G3/8"
4000:G1/2"

Drain Type
Blank:Manual Drain Type
D:Auto Drain Type



BC4000



AC2000

H Series High Pressure Filter & Regulator

Ordering Code

QFRH — 15

High pressure Filter & Regulator

Connection
8:G1/4" 10:G3/8"
15:G1/2" 20:G3/4"
25:G1"

QTYH–25



Specifcation

Operating Fluid	Air
Filtering Eliment Roughness	20μm or 40μm
Range of Adjustable Pressure	0.15~3.5MPa
Max. Input pressure	4MPa
Operating Temperature Range	5~80℃

Graphic Symbol

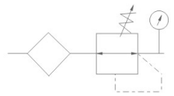

H Series High Pressure Regulator

Ordering Code

QTYH — 15

High pressure Regulator

Connection
8:G1/4" 10:G3/8"
15:G1/2" 20:G3/4"
25:G1"

QTYH–25



Specifcation

Operating Fluid	Air
Range of Adjustable Pressure	0.05~3.5MPa
Max. Input pressure	4MPa
Operating Temperature Range	–25~80℃

Graphic Symbol

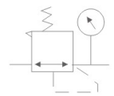

H Series High Pressure Filter

Ordering Code

QSLH — 15

High Pressure Filter

Pors Size
8:G1/4"
10:G3/8"
15:G1/2"
20:G3/4"
25:G1"

QSLH–15



Specifcation

Operating Fluid	Air
Filtering Eliment Roughness	20μm or 40μm
Working of Adjustable Pressure	0.15~3.5MPa
Max. Input pressure	4MPa
Operating Temperature Range	–25~80℃

Graphic Symbol



HAD402 series Auto Drain



Graphic Symbol



HAD402–04

SAH402 series High Pressure Auto Drain



Graphic Symbol



SAH402–04

Ordering Code

FADV — 200 — FN/W

Series
FADV Series

Machine Type
200 Series
300 Series
400 Series
BC Series

Drain Principle
F:Floating ball Type
N:Female Thread
W:Male Thread



FADV 300–FN



FADV 300–FW

FADV — 200 — G10

Series
FADV Series

Machine Type
200 Series
300 Series
400 Series
BC Series
MA Series
AC Series

Drain Principle
G:Level Type(10,12,14,16 Number Stands for inner diameter of equipped water cup)



FADV 400–FN(BC–FN)



FADV 400–FW(BC–FW)





FADV 200–G10(AC–G10)



FADV–MA–G14



FADV 400–G12
(FADV BC–GN16)



FADV 300–G12
(FADV 300–G14)

- **Range of Application:**
  This product is installed at the bottom of water cups for auto dischargers,air filters and air filter regulators and can auto discharge the condense water gathered in the water cup.
- **Technical Requirements:**
  Working medium:Compressed air
  Ambient and media temperature:5~60℃
  Operating pressure range:0.15~1.00Mpa
- **Features:**
  Auto drainer/Air Shut off Drain/Manual Drain
- **Points for Attention:**
  When using,the drainer should be installed vertically the drain port facing down.

Dimensional Drawing of Water Cup Connecting Part

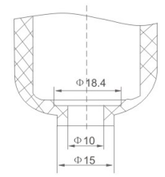

FADV–200(AC)

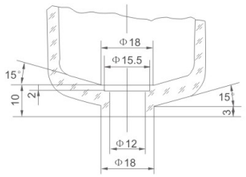

FDV–300

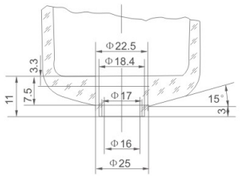

FADV–(BC)

Overall Dimensions

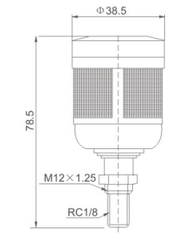

FADV–400–FW

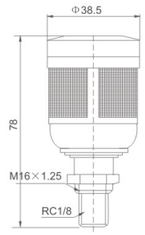

FADV–BC–FW

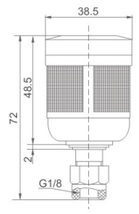

FADV–400–FN(BC–FN)

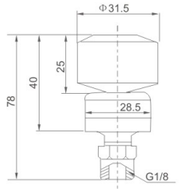

ADV–300–FN

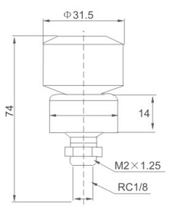

ADV–300–FW

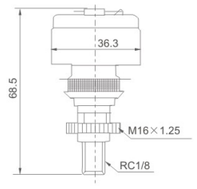

FADV–400–G12

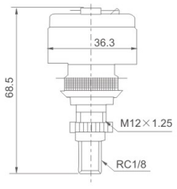

FADV–BC–G16

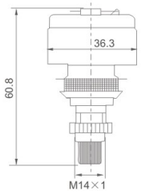

FADV–MA–G14

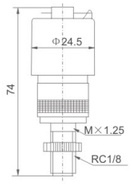

FADV–300–G12
(FADV–300–G14)

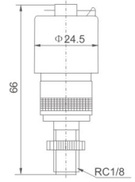

FADV–200–G10
(FADV–AC–G10)

Ordering Code

2V	025	06	—	AC220V	—	V

Specification Code
2V:Two-positionTwo-way Solenoid Valve

Aperture of Flow Rate
025:2.5mm
130:13mm
250:25mm

Port Size
06:G1/8"
08:G1/4"
10:G3/8"
15:G1/2"
20:G3/4"
25:G1"

Standard Voltage
DC12V
DC24V
AC24V 50Hz/60Hz
AC110V 50Hz/60Hz
AC220V 50Hz/60Hz
AC380V 50Hz/60Hz

Oil Seal Code
Blank:NBR
V:VITON(For High temperature)

Graphic Symbol







Specifcation

Model	2V025-06	2V025-08	2V130-10	2V130-15	2V250-20	2V250-25
Working Medium	Air,Water,Oil					
Motion Pattern	Direct Drive Type		Guide Type			
Type	Normal Close Type					
Aperture of Flow Rate(mm)	2.5		13		25	
CV Value	0.23		6.2		23	
Port Size	G1/8"	G1/4"	G3/8"	G1/2"	G3/4"	G1"
Operation Fluid Viscosity	20 CST (Below)					
Working-pressure	Air,Water,Oil 0~0.8MPa		Air,Water,Oil 0.05~0.7MPa			
Max. Pressure Resistance	12kgf/cm²		10.5kgf/cm²			
Operating Temperature Range	-10~+80℃					
Voltage Range	±10%					
Protect Class	IP65					
Power Consumption	AC:7VA860Hz PC:6W					
Insulation	F Class					
Material of Body	Aluminum or Brass		Brass			
Material of Oil Seal	NBR or VITON		NBR			
Shortest Excitation Time	0.05 Second					

Internal structure

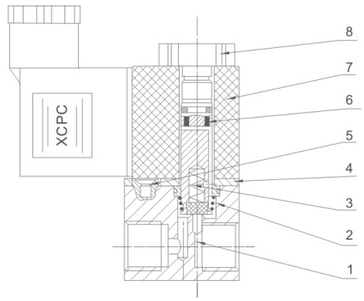

NO	Name
1	Body Of Valve
2	Spring
3	Assembly Of Iron Core
4	Assembly Of Iron Core
5	Cruciform Slot Screw
6	Platen
7	Coil
8	Nut

2V Series 2/2 Solenoid Valve

Internal structure

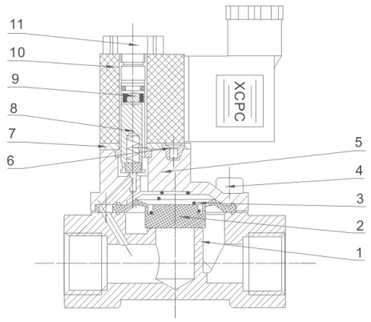

NO	Name
1	Body Of Valve
2	Diaphragm
3	Spring
4	Socket Hexagon Screws
5	Cover board
6	Cruciform Slot Screw
7	Platen
8	Assembly Of Iron Core
9	Assembly Of Iron Core
10	Coil
11	Nut

Overall Dimensions

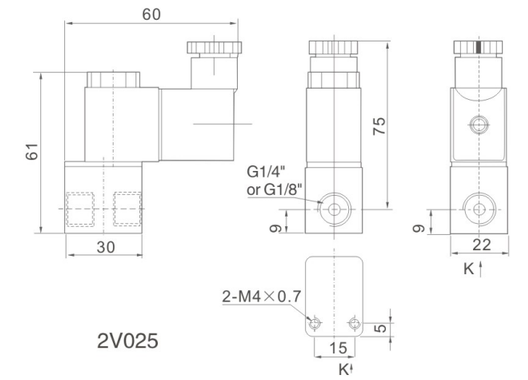

2V025

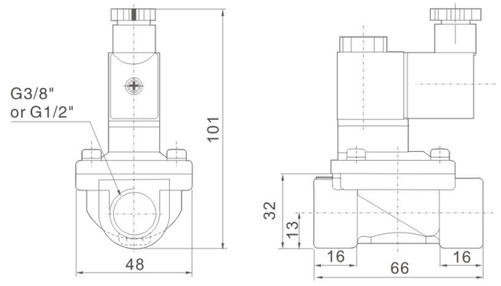

2V130

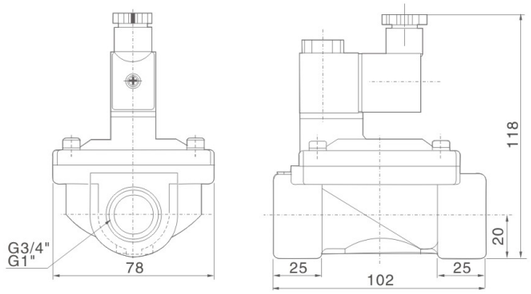

2V250

2P Series 2/2 Solenoid Valve (Plastic Steel Type)

Ordering Code

2P — 025 — 06 — AC220V — □

Specification Code
2P:Two-position Two-way Solenoid Valve (Reinforced plastic steel type)

Aperture of Flow Rate
025:2.5mm

Port Size
06:G1/8"
08:G1/4"

Standard Voltage
DC12V DC24V
AC24V 50Hz/60Hz
AC110V 50Hz/60Hz
AC220V 50Hz/60Hz
AC380V 50Hz/60Hz

Wiring Form
Blank:Lead wire Type
D: Joint Connector



Graphic Symbol

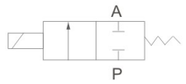

Specifcation

Model	2P025-06	2P025-08
Working Medium	Air,Water,Oil,gas	
Motion Pattern	Direct Drive Type	
Type	Normal Close Type	
Aperture of Flow Rate(mm)	2.5	
CV Value	0.23	
Port Size	G1/8"	G1/4"
Operation Fluid Viscosity	20 CST (Below)	
Working-pressure	0~0.7MPa	
Max. Pressure Resistance	1.0MPa	
Operating Temperature Range	-5~+80℃	
Voltage Range	±10%	
Material of Body	Engineering Plastic Steel	
Material of Oil Seal	NBR EPDM or VITON	

Overall Dimensions

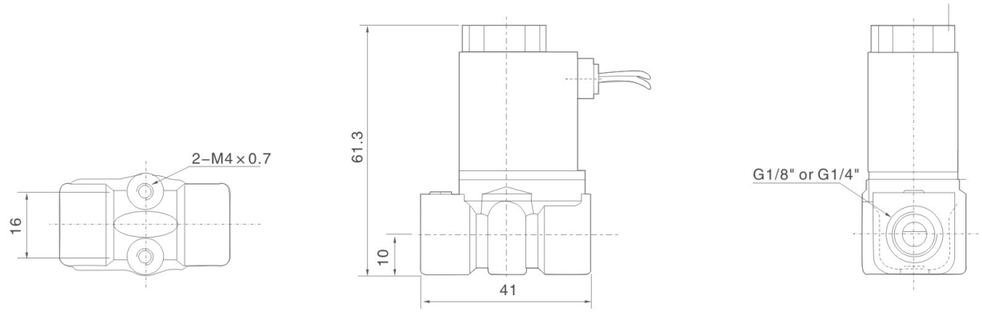

2W(UD) Series 2/2 Direct Drive Type Solenoid Valve (Small Aperture)

Ordering Code

2W	025	—	08	F	—	AC220V	—	□

Specification Code
2W:Two-position Two-way solenoid valve direct drive type
2WH:Two-position Two-way solenoid valve(High pressure direct drive Type)

Aperture of Flow Rate
012:1.2mm
020:2.0mm
025:2.5mm
040:4.0mm

Port Size
06:G1/8"
08:G1/4"
10:G3/8"

Initial Estate
Blank:Pipe Jiont Ttype
F: Flange Type

Standard Voltage
DC12V DC24V
AC24V 50Hz/60Hz
AC36V 50Hz/60Hz
AC110V 50Hz/60Hz
AC220V 50Hz/60Hz
AC380V 50Hz/60Hz

Wiring Form
Blank:Lead Wire Type
D:Joint Connector
E:Blast-proof Coil
G:Water-proof Coil





Graphic Symbol

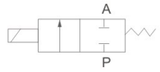

Specifcation

Model	2W025-06	2W025-08	2W040-10	2WH012-06	2WH012-08	2WH020-10
Working Medium	Air,Water,Oil,Gas					
Motion Pattern	Direct Drive Type					
Type	Normal Close Type					
Aperture of Flow Rate(mm)	2.5		4	1.2		2
CV Value	0.23		0.60	0.05		0.15
Port Size	G1/8"	G1/4"	G3/8"	G1/8"	G1/4"	G3/8"
Operation Fluid Viscosity	20 CST (Below)					
Working-pressure	Air,Water,Oil,Gas:0~0.7MPa			Air,Water,Oil:0~2.0MPa		
Max. Pressure Resistance	1.0			3.5		
Operating Temperature Range	-5~+80℃					
Voltage Range	±10%					
Material of Body	Brass					
Material of Oil Seal	NBR EPDM or VITON					

Internal structure

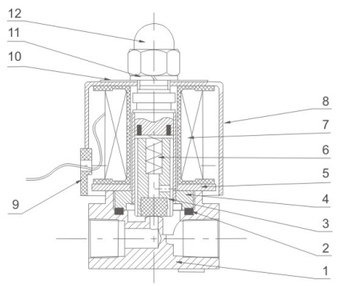

NO	
1	Body Of Valve
2	O-ring
3	Assembly Of Iron Core
4	Assembly Of Iron Core
5	Magnetic Plate
6	Spring
7	Assembly Of Coil
8	Iron Cover
9	Cord-locks
10	Name Plate
11	Gasket
12	Head Cover Nut

Overall Dimensions

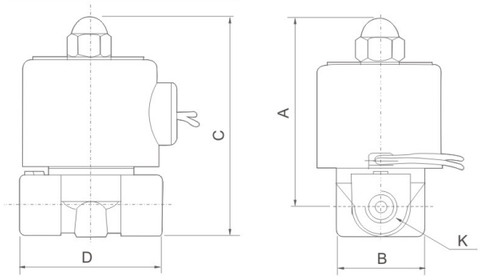

Dimension Sheet

Symbol/Model	A	B	C	D	K(PT)
2W025-06	66	30.3	75	41.5	G1/8"
2W025-08	66	30.3	75	41.5	G1/4"
2W040-10	74	32.2	85.5	53	G3/8"
2WH012-06	66	30.3	75	40.5	G1/8"
2WH012-08	66	30.3	75	40.5	G1/4"
2WH020-10	74	32.3	85.5	53	G3/8"

2W(UW) Series 2/2 Direct Drive Type Solenoid Valve(Large Aperture)

Ordering Code

2W	160	—	15	—	F	AC220V	—	□

Specification Code
2W:Two-position two-way solenoid valve (direct drive type)

Aperture of Flow Rate
160:16mm
200:20mm
250:25mm
350:35mm
400:40mm
500:50mm

Port Size
10:G3/8" 25:G1"
15:G1/2" 35:G1 1/4"
20:G3/4" 40:G1 1/2"
50:G2"

Initial Estate
Blank:Pipe Jiont Type
F: Flange Type

Standard Voltage
DC12V DC24V
AC24V 50Hz/60Hz
AC36V 50Hz/60Hz
AC110V 50Hz/60Hz
AC220V 50Hz/60Hz
AC380V 50Hz/60Hz

Wiring Form
Blank:Lead Wire Type
D: Joint Connector





Graphic Symbol

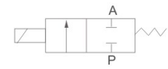

Specifcation

Model	2W160-10	2W160-15	2W200-20	2W250-25	2W350-35	2W400-40	2W500-50
Working Medium	Air,Water,Oil,gas						
Motion Pattern	Direct Drive Type						
Type	Normal Close Type / Normal Open Type						
Aperture of Flow Rate(mm)	16		20	25	35	40	50
CV Value	4.8		7.6	12	24	29	48
Port Size	G3/8"	G1/2"	G3/4"	G1"	G1 1/4"	G1 1/2"	G2"
Operation Fluid Viscosity	20 CST (Below)						
Working-pressure	Air:0~0.7MPa Water:0~0.5MPa Oil:0~0.5MPa Gas: 0~7MPa						
Max. Pressure Resistance	1.0MPa						
Operating Temperature Range	-5~+80℃						
Voltage Range	±10%						
Material of Body	Brass						
Material of Oil Seal	NBR EPDM or VITON						

Internal structure

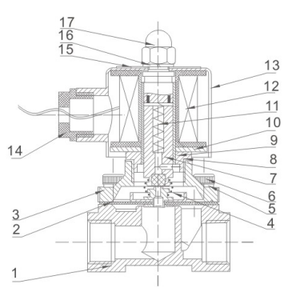

NO	Name	NO	Name
1	Body Of Valve	10	Magnetic Plate
2	Assembly Of Diaphragm	11	Spring
3	Valve Cover	12	Assembly Of Coil
4	Pull Spring	13	Iron Cover
5	Gasket	14	Cord-locks
6	Socket Hexagon Screws	15	Name Plate
7	Assembly Of Iron Core	16	Gasket
8	Seal Gasket	17	Head Cover Nut
9	Assembly Of Iron Core		

Overall Dimensions

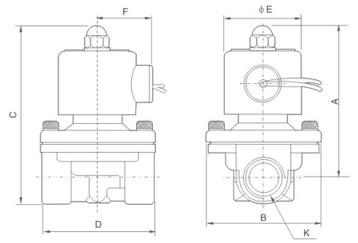

2W(Large Aperture)

Dimension Sheet

Symbol/Model	A	B	C	D	E		K
2W160-10	101.5	57	117	67	50	36	G3/8"
2W160-15	101.5	57	117	67	50	36	G1/2"
2W200-20	107	57	123.5	72	50	36	G3/4"
2W250-25	111.5	73.5	134.5	92	50	36	G1"
2W350-35	142	95	172	125	70.5	56	G1 1/4"
2W400-40	142	95	172	125	70.5	56	G1 1/2"
2W500-50	172	123	209	168	70.5	56	G2"

方向控制元件 Valves & MANIFOLDS

2S Series Stainless Steel Solenoid Valve

Ordering Code

2S	025	—	08	—	F	AC220V	—	□

Specification Code
2S:Two-position two-way solenoid valve (Stainless steel direct drive type)

Aperture of Flow Rate
025:2.5mm
040:4.0mm
160:16mm
200:20mm
250:25mm
350:35mm
400:40mm
500:50mm

Port Size
08:G1/4"
10:G3/8"
15:G1/2"
20:G3/4"
25:G1"
35:G1 1/4"
40:G1 1/2"
50:G2"

Initial Estate
Blank:Pipe Jiont type
F: Flange Type

Standard Voltage
DC12V DC24V
AC24V 50Hz/60Hz
AC36V 50Hz/60Hz
AC110V 50Hz/60Hz
AC220V 50Hz/60Hz
AC380V 50Hz/60Hz

Wiring Form
Blank:Lead Wire Type
D:Joint Connector
E:Blast-proof Coil
G:Water-proof Coil

Graphic Symbol

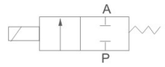



Specifcation

Model	2S025-06(08)	2S050-10	2S160-10(15)	2S030-06(08)	2S250-25	2S350-35(40)	2S500-50
Working Medium	Air,Water,Oil,Gas						
Motion Pattern	Direct Drive Type						
Type	Normal Close Type						
Aperture of Flow Rate(mm)	2.5	5	16	20	35	40	50
CV Value	0.23	0.60	4.8	7.6	24	29	48
Port Size	G1/8" G1/4"	G3/8"	G3/8" G1/2"	G3/4"	G1"	G1 1/4" G1 1/2"	G2"
Operation Fluid Viscosity	20 CST (Below)						
Working-pressure	Air:0~0.7MPa		Water:0~0.5MPa Air:0~0.7MPa Oil:0~0.5MPa Gas: 0~0.7MPa				
Max. Pressure Resistance	1.05MPa						
Operating Temperature Range	-5~+80℃						
Voltage Range	±10%						
Material of Body	Stainless steel						
Material of Oil Seal	NBR EPDM or VITON						

Note:2S Series Solenoid Valve's Oevrall Dimension, Flow Chart and Inner Structure all Same as 2W Series.

2W/2S Normal Open Series Solenoid Valve

Ordering Code

2W	160	—	10	NO	—	AC220V	—	□

Specification Code
2W:Two-position two-way solenoid valve (direct drive type)
2S:Stainless steel two position two way solenoid valve(direct drive type)

Aperture of Flow Rate
040:4.0mm
160:16mm
200:20mm
250:25mm

Port Size
10:G3/8"
15:G1/2"
20:G3/4"
25:G1"

Initial Estate
NO: Normal Open

Standard Voltage
DC12V DC24V
AC24V 50Hz/60Hz
AC36V 50Hz/60Hz
AC110V 50Hz/60Hz
AC220V 50Hz/60Hz
AC380V 50Hz/60Hz

Wiring Form
Blank:Lead Wire Type
D:Joint Connector
E:Blast-proof Coil
G:Water-proof Coil







Graphic Symbol

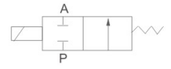

Specifcation

Model	2W/2S(040/050-10NO)	2W/2S(160-10NO)	2W/2S(160-15NO)	2W/2S(200-20NO)	2W/2S(250-25NO)
Working Medium	Air,Water,Oil,Gas				
Motion Pattern	Direct Drive Type				
Type	Normal Open Type				
Aperture of Flow Rate(mm)	4	16	16	20	25
CV Value	0.6	4.8	4.8	7.6	12
Port Size	G3/8"	G3/8"	G1/2"	G3/4"	G1"
Operation Fluid Viscosity	20 CST (Below)				
Working-pressure	Water:0~0.5MPa Air:0~0.7MPa Oil:0~0.5MPa Gas: 0~0.7MPa				
Max. Pressure Resistance	1.05MPa				
Operating Temperature Range	-5~+80℃				
Voltage Range	±10%				
Material of Body	2W: Brass; 2S: Stainless steel				
Material of Oil Seal	NBR EPDM or VITON				

Overall Dimensions

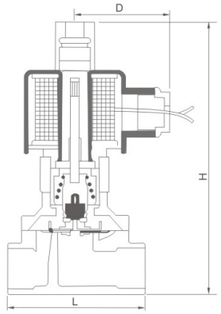

Dimension Sheet

Model	L	H	D
2W040-10NO	53	105	54
2W160-10NO	69	116	62
2W160-15NO	69	116	62
2W200-20NO	73	127	62
2W250-25NO	99	135	62

2L(US) Series 2/2 Solenoid Valve

Ordering Code

2L	70	—	15	—	AC220V
Specification Code 2L:Steam Type Two-position Two-way Solenoid Valve	**Aperture of Flow Rate** 170:17mm 200:22mm 300:30mm 500:50mm		**Port Size** 10:G3/8" 15:G1/2" 20:G3/4" 25:G1" 35:G1 1/4" 40:G1 1/2" 50:G2"		**Standard Voltage** DC12V DC24V AC24V 50Hz/60Hz AC36V 50Hz/60Hz AC110V 50Hz/60Hz AC220V 50Hz/60Hz AC380V 50Hz/60Hz



Graphic Symbol

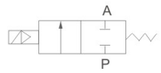

Specifcation

Model	2L170-10	2L170-15	2L170-20	2L200-25	2L300-35	2L300-40	2L500-50
Working Medium	Air, Water, Steam						
Motion Pattern	Guide Type						
Type	Normal Close Type						
Aperture of Flow Rate(mm)	17			22	30		50
CV Value	4.8			12	20		48
Port Size	G3/8"	G1/2"	G3/4"	G1"	G1 1/4"	G1 1/2"	G2"
Operation Fluid Viscosity	20 CST(Below)						
Working-pressure	Air, Water, Steam:0.1~1.5MPa						
Max. Pressure Resistance	2.25MPa						
Operating Temperature Range	-5~+180℃						
Voltage Range	±10%						
Material of Body	Brass						
Material of Oil Seal	PTFE						

Internal structure

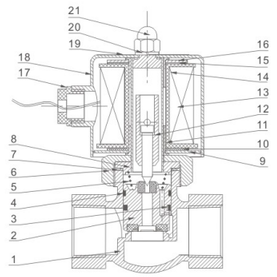

NO	Name	NO	Name	NO	Name
1	Body Of Valve	8	Assembly of Iron Core	15	Gasket
2	Assembly Of Piston	9	Magnetic Plate	16	Magnetic Plate
3	Springiness Spacer	10	Gasket	17	Cord-locks
4	Wear Strip	11	Bush	18	Iron Cover
5	Spring	12	Assembly Of Iron Core	19	Name Plate
6	Nut	13	Assembly Of Coil	21	Gasket
7	O-ring	14	Bush	21	Head Cover Nut

Overall Dimensions

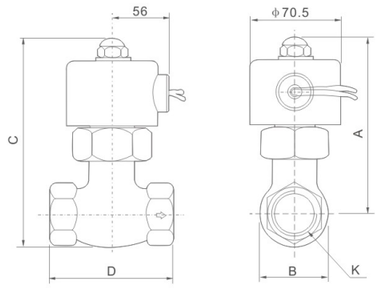

Dimension Sheet

Model	A	B	C	D	K
2L170-10	125	38	146	76	G3/8"
2L170-15	125	42	146	81	G1/2"
2L170-20	125	47	146	84	G3/4"
2L200-25	136	54	162	91.5	G1"
2L300-35	148	76	185	111	G1 1/4"
2L300-40	148	76	185	111	G1 1/2"
2L500-50	176	88	223	164	G2"

PU220 Series 2/2 Solenoid Valve(Direct drive type)

Ordering Code

PU	220	02	—	A	AC220V	—	T
Specification Code PU:Two -position Two -way solenoid valve	**Motion Pattem** 220:Direct drive Type	**Port Size** 01:G1/8" 02:G1/4" 03:G3/8" 04:G1/2" 06:G3/4" 08:G1" 12:G1 1/4" 14:G1 1/2" 20:G2"		**Initial Estate** A: Large Flux AR: Small Aperture Direct Drive F: Flange Type	**Standard Voltage** AC220V AC110V DC12V DC24V		**Wiring Form** Blank:Standard Coil T:Timer Coil







Graphic Symbol

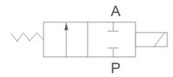

Specifcation

Model	PU220-01AR	PU220-02AR	PU220-03AR	PU220-03A	PU220-04AR	PU220-04A	PU220-06A	PU220-08A
Working Medium	Air, Water, Oil							
Motion Pattern	220:Direct Drive Type/225:Guide Type							
Type	Normal Close Type							
Aperture of Flow Rate(mm)	1.5	2.3	8	13	8	13	20	25
CV Value	0.10	0.18	1.00	4.00	1.00	4.00	8.60	11.00
Joint Pipe Bore	G1/8"	G1/4"	G3/8"	G3/8"	G1/2"	G1/2"	G3/4"	G1"
Operation Fluid Viscosity	50 CST							
Working-pressure	0~0.7MPa							
Max. Pressure Resistance	1.05MPa							
Operating Temperature Range	-5~+80℃							

Internal structure

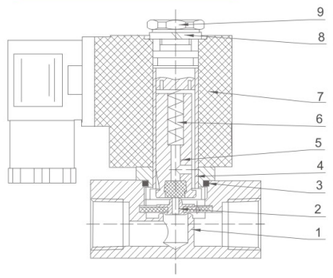

NO	Name
1	Body Of Valve
2	Assembly of Diaphragm
3	O-ring
4	Assembly Of Iron Core
5	Assembly Of Iron Core
6	Spring
7	Coil
8	Gasket
9	Nut

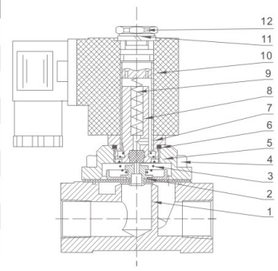

NO	Name
1	Body Of Valve
2	Assembly Of Diaphragm
3	Pull Spring
4	Socket Hexagon Screws
5	Valve Cover
6	O-ring
7	Assembly Of Iron Core
8	Assembly Of Iron Core
9	Spring
10	Coil
11	Gasket
12	Nut

Overall Dimensions

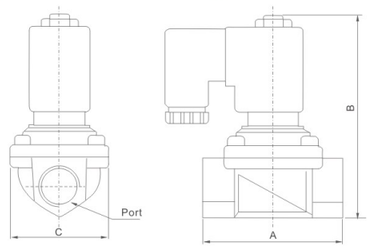

Dimension Sheet

Model	Port	A	B	C
PU220-01AR	G1/8"	22	72	22
PU220-02AR	G1/4"	35	72	25.4
PU220-03AR	G3/8"	55	79.5	30
PU220-03A	G3/8"	65.5	101	48
PU220-04A	G1/2"	65.5	101	48
PU220-06A	G3/4"	71	107	58
PU220-08A	G1"	97	120	70

Valves & MANIFOLDS 方向控制元件

PU 225 Series 2/2 Solenoid Valve(Guide type)

Ordering Code

PU — 225 — 03 — A — AC220V — T

Specification Code
PU:Two-position two-way solenoid valve
SPU: Stainless steel two-position two-way solenoid valve

Motion Pattem
225: Guide Type

Port Size
03:G3/8"
04:G1/2"
06:G3/4"
08:G1"
12:G1¹/4"
14:G1¹/2"
20:G2"

Initial Estate
A: Standard Type
F: Flange Type

Standard Voltage
AC220V
AC110V
DC12V
DC24V

Wiring Form
Blank:Standard Coil
T: Timer Coil

Graphic Symbol

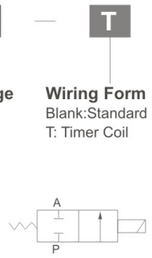

Specifcation

Model	PU225-03A / SPU225-03A	PU225-04A / SPU225-04A	PU225-06A / SPU225-06A	PU225-08A / SPU225-08A	PU225-12A / SPU225-12A	PU225-14A / SPU225-14A	PU225-20A
Working Medium	Air,Water,Oil						
Motion Pattern	Guide Type						
Type	Normal Close Type						
Aperture of Flow Rate(mm)	13	13	25	25	38	38	50
CV Value	4.50	4.50	12.00	12.00	22.00	30.00	48.00
Port Size	G3/8"	G1/2"	G3/4"	G1"	G1¹/4"	G1¹/2"	G2"
Operation Fluid Viscosity	50 CST (Below)						
Working-pressure	0.05~1.0MPa						
Max. Pressure Resistance	1.5MPa						
Operating Temperature Range	-5~+80℃						
Material of Body	Brass or steel						

Overall Dimensions

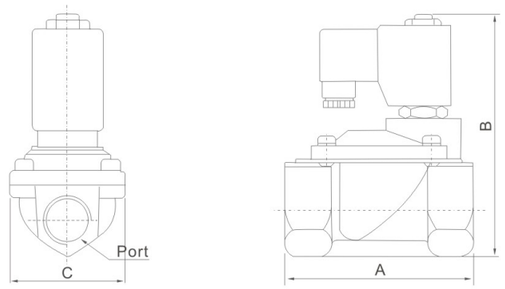

Dimension Sheet

Model	Bore	A	B	C
PU225-03A	G3/8"	66.5	106.5	48.0
SPU225-03A				
PU225-04A	G1/2"	66.5	106.5	48.0
SPU225-04A				
PU225-06A	G3/4"	72.0	113.0	58.0
SPU225-06A				
PU225-08A	G1"	96.0	121.0	70.0
SPU225-08A				
PU225-12A	G1¹/4"	128.0	145.5	96.0
SPU225-12A				
PU225-14A	G1¹/2"	128.0	145.5	96.0
SPU225-14A				
PU225-20A	G2"	161.0	160.5	112.0

PU 225 Series Solenoid Valve(Steam Type)

Ordering Code

PU — 225 — 03 — S — AC110V

Specification Code
PU:Two-position two-way solenoid valve

Motion Pattem
225: Guide Type

Port Size
03:G3/8" 04:G1/2"
06:G3/4" 08:G1"

Initial Estate
S: Steam Type

Standard Voltage
AC230V AC110V
DC12V DC24V

Graphic Symbol



Specifcation

Model	PU225-03S	PU225-04S	PU225-06S	PU225-08S
Working Medium	Air, Water, Oil			
Motion Pattern	Guide Type			
Type	Normal Close Type			
Aperture of Flow Rate(mm)	13	13	25	25
CV Value	4.5	4.50	12.00	12.00
Port Size	G3/8"	G1/2"	G3/4"	G1"
Operation Fluid Viscosity	50 CST			
Working-pressure	0.05~1.0MPa			
Max. Pressure Resistance	1.5MPa			
Operating Temperature Range	-10~+185℃			

Overall Dimensions

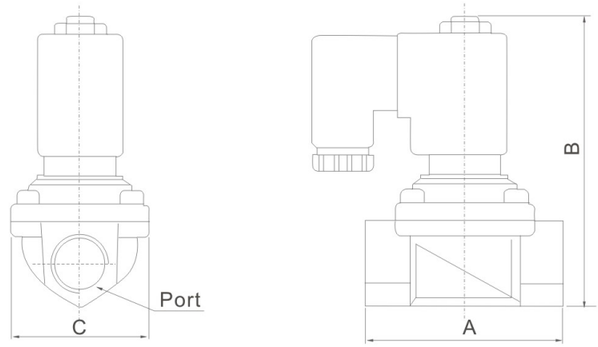

Dimension Sheet

Model	Port	A	B	C
PU225-03S	G3/8"	65	121	48
PU225-04S	G1/2"	65	121	48
PU225-06S	G3/4"	97	152	70
PU225-08S	G1"	97	152	70

Valves & MANIFOLDS 方向控制元件

5404 Series High Pressure,High Temperature Solenoid Valve

Ordering Code

5404 — 04 — AC220V — □

Model

Port Size
02:G1/4"
04:G1/2"
06:G3/4"
08:G1"

Standard Voltage
DC12V DC24V
AC24V 50/60Hz
AC36V 50/60Hz
AC110V 50/60Hz
AC220V 50/60Hz
AC380V 50/60Hz

Wiring Form
Blank:Lead Wire Type
D:Joint Connector



Graphic Symbol



Specifcation

Model	5404-04	5404-06	5404-08
Working Medium	Air, Water, Oil		
Motion Pattern	Guide Type		
Type	Normal Close Type		
Aperture of Flow Rate(mm)	12	25	25
KV Value	2.0	5.0	10.0
Joint Pipe Bore	G1/2"	G3/4"	G1"
Working-pressure(kgf/cm^2)	Gas:1~50,Liquid:1~50	Gas:1~40,Liquid:01~25	Gas:1~40, Liquid:1~25
Max. Pressure Resistance(kgf/cm^2)	75	60	
Operating Temperature Range(℃)	-5~+150℃		
Voltage Range	±10%		
Protect Class	IP65		
Power Consumption	AC:5.5VA DC:9W		
Insulation	F Class		
Material of Body	Brass		
Material of Oil Seal	PTFE		

Overall Dimensions

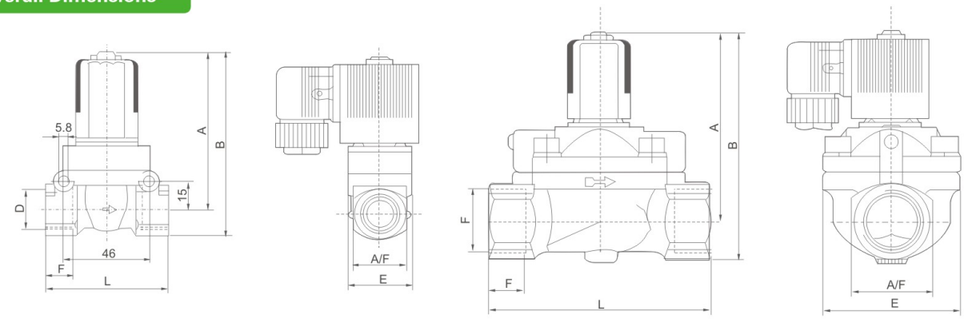

Dimension Sheet

Model	Bore(mm)	Port	A	B	F	E	L	A/F
5404-04	12.0	G1/2"	83.0	98	14	32	63	27
5404-06	20.0	G3/4"	99.5	125	16	60	92	40
5404-08	25.0	G1"	99.5	125	16	60	92	40

DMF Series Right Angle Pulse Valve

Ordering Code

DMF — Z — 25 — P — EX

Pulse Valve

Type Code
Z:Solenoid Control
Q:Pneumatic Control

Orifice Size

Thead Type
Blank:Normal Thread Type
A:Thread Type+ Insert pipe
P:Thread Type
S:Double Diaphragms
J:Thread Type (Economy Type)

Wiring Form
Blank:Normal Type
EX:Ex-proof type



Speciality

Adopt international advanced technology.
Used for dust remover.
Key parts all made of imported materials.
Pneumatic control type,solenoid control type,ex-proof solenoid control type for choose.
Female thread connection port,easy to be mounted.

Specifcation

Model	DMF-Z-20A	DMF-Z-20P	DMF-Z-20	DMF-Z-25	DMF-Z-25P	DMF-Z-35P	DMF-Z-40S	DMF-Z-50S	DMF-Z-62S	DMF-Z-76S	DMF-Z-100S
Working Pressure	0.3~0.8MPa										
Ambient Temperature	-5~55℃										
Relatively Humidity	＜85%										
Working Medium	Clean Air										
Voltage	AC110V/AC220V/DC24V										
Diaphragm Life Cycles	Over 1000k Cycles										
Orifice(mm)	ϕ20	ϕ20	ϕ20	ϕ25	ϕ25	ϕ35	ϕ40	ϕ50	ϕ62	ϕ76	ϕ100
Connection Port	G3/4"	G3/4"	G3/4"	G1"	G1"	G1 1/2"	G1 1/2"	G2"	G2 1/2"	G3"	ϕ100

Overall Dimensions

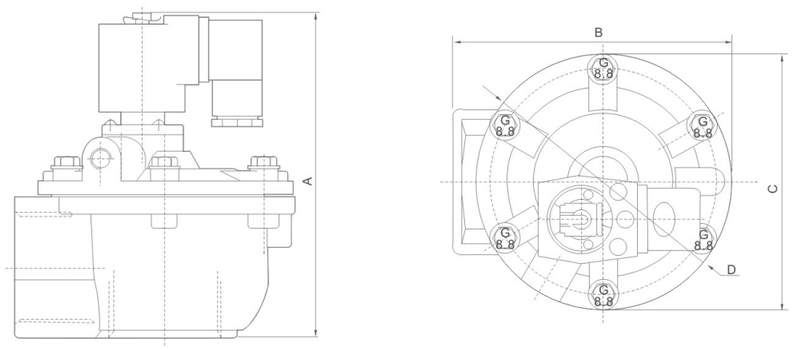

Dimension Sheet

Model	DMF-Z-20A	DMF-Z-20P	DMF-Z-20	DMF-Z-25	DMF-Z-25P	DMF-Z-35P	DMF-Z-40S	DMF-Z-50S	DMF-Z-62S	DMF-Z-76S	DMF-Z-100S
A	173	124	110	110	124	142	166	202	222	245	356.5
B	145	105	90.5	90.5	105	121	132	210	210	230.5	286.5
C	-	82.5	75	75	82.5	-	-	-	-	-	-
D	ϕ90	-	-	-	-	ϕ112	ϕ137	ϕ185	ϕ185	ϕ200	ϕ221

DMF Series In Line Pulse Valve

Ordering Code

DMF — Y — 50 — S — EX

- DMF — Pulse Jet Valve
- Y — Type Code: Y:Solenoid Control; Q:Pneumatic Control
- 50 — Orifice
- S — Double Diaphragms
- EX — Wiring Form: Blank:Normal Type; EX:Ex-proof Type



Speciality

Adopt international advanced technology
Used for dust remover
Key parts all made of imported materials
Pneumatic control type.solenoid control type.ex-proof solenoid control type for choose
Directing mounted to gas bag better blowing effect and small loss of air source.

Specifcation

Model	DMF-Y-50S	DMF-Y-62S	DMF-Y-76S
Working Pressure	0.3~0.8MPa		
Ambient Temperature	-5~55℃		
Relatively Humidity	＜85%		
Working Med ium	Clean Air		
Voltage	AC110V/AC220V/DC24V		
Diaphragm Life Cycles	Over One Million Cycles		
Orifice(mm)	ϕ50	ϕ62	ϕ76
Connection Port	ϕ65	ϕ80	ϕ90

Overall Dimensions

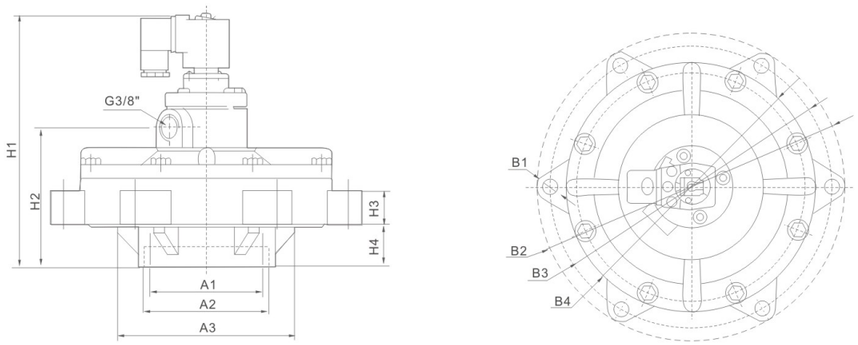

Dimension Sheet

Model	A1	A2	A3	B1	B2	B3	B4	H1	H2	H3	H4
DMF-Y-50S	ϕ64.5	ϕ78.5	ϕ118	6-ϕ11.5	ϕ200	ϕ180	ϕ159	187	100	25	31
DMF-Y-62S	ϕ80	ϕ93.5	ϕ145	6-ϕ11	ϕ226	ϕ204	ϕ185	197	107	34.5	35
DMF-Y-76S	ϕ90	ϕ99	ϕ141	6-ϕ11	ϕ248	ϕ227	ϕ200	205	113	27	34

DMF Series Insert Pipe Type Pulse Valve

Ordering Code

DMF — Q — 25 — DD — EX

- DMF — Pulse Jet Valve
- Q — Type code: Blank:Solenoid control; Q:Pneumatic control
- 25 — Orifice Solenoid
- DD — Insert Pipe Type
- EX — Wiring Form: Blank:Normal Type; EX:Ex-proof Type



Speciality

Adopt international advanced technology
Used for dust remover
Key parts all made of imported materials
Pneumatic control type.solenoid control type,ex–proof solenoid control type for choose.
Insert pipe style,much easier to be mounted.

Specifcation

Model	DMF-25DD	DMF-45DD
Working Pressure	0.3~0.8MPa	
Ambient Temperature	-5~55℃	
Relatively Humidity	＜85%	
Working Med ium	Clean Air	
Voltage	AC110V/AC220V/DC24V	
Diaphragm Life Cycles	Over One Million Cycles	
Orifice(mm)	ϕ25	ϕ40
Connection Port	ϕ35	ϕ50

Overall Dimensions

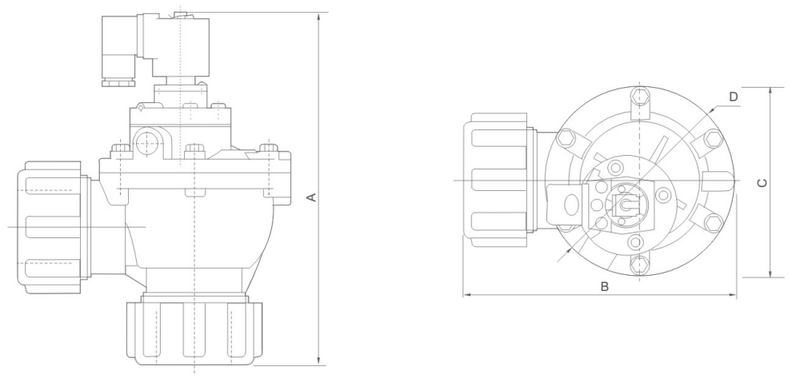

Dimension Sheet

Model	A	B	C	D
DMF-25DD	189	131	82.5	-
DMF-45DD	237	179.5	-	ϕ126

方向控制元件 Valves & MANIFOLDS

JZF Series Plastic Actuator Bevel Valve

Ordering Code

JZF — 15 — 50 — S — C — □

Serise Code
JZF Series Plastic Bevel Valve

Port Size
10:G3/8"
15:G1/2"
20:G3/4"
25:G1"
32:G1-1/4"
40:G1-1/2"
50:G2"
65:G2-1/2"
80:G3"

Actoator Size
40:40mm
50:50mm
63:63mm
80:80mm
100:100mm

Action Type
S:Single Action
D:Double Action

Control Function
C:Normal Close (Standard)
O:Normal Open

Body Material
Blank:S.S 304 (Standard)
316:S.S 316
316L:S.S 316L



Graphic Symbol

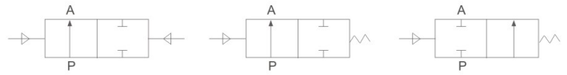

Double-Acting　Normally Closed　Normally Open

Specifcation

Model	10	15	20	25	32	40	50	65	80
Port size	G3/8"	G1/2"	G3/4"	G1"	G1-1/4"	G1-1/2"	G2"	G2-1/2"	G3"
KV Value(m^3/h)	3.7	4.2	9	19	33	42	59	90	135
Max.Working Pressure(Mpa)	0~1.6	0~1.6	0~1.1	0~1.1	0~1.5	0~1.25	0~1.0	0~1.6	0~1.6
Min.Pilot Pressure(Mpa)	0.39	0.39	0.39	0.42	0.5	0.44	0.4	0.4	0.4
Actuator	40	50	50	50/63	63	63	63/80	80	100
Medium Temperature	-10~+180℃								
Flow Direction	A(Flow Direction Below The Seat) or B(Flow Direction above The Seat)								

Overall Dimensions

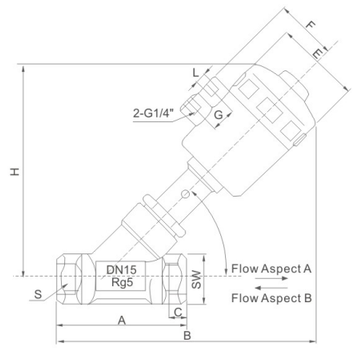

Dimension Sheet

Orifice Size (mm)	Port size	Actuator Size (ϕmm)	A	B	C	ϕE	F	H	S	SW	G	L
10	G3/8"	40	65	142	12	53	30	85	G3/8"	25	20	G1/8"
15	G1/2"	50	76	168	14	64	44	115	G1/2"	28	24	G1/4"
20	G3/4"	50	92	175	16	64	44	131	G3/4"	32	24	G1/4"
25	G1"	63	103	218	21	80	54	166	G1"	39	24	G1/4"
32	G1-1/4"	63	112	228	19	80	54	172	G1-1/4"	49	24	G1/4"
40	G1-1/2"	63	129	232	21	80	54	174	G1-1/2"	56	24	G1/4"
50	G2"	80	143	263	27	100	62	202	G2"	68	24	G1/4"
65	G2-1/2"	80	186	280	28	100	62	209	G2-1/2"	84	24	G1/4"
80	G3"	100	218	355	34	125	71	268	G3"	101	30	G1/4"

JZF Series Stainless Steel Bevel Valve

Ordering Code

JZF — 10 — 40 — □ — □

Serise Code
JZF Series Stainless Steel Bevel Valve

Port Size
10:G3/8"
15:G1/2"
20:G3/4"
25:G1"
32:G1-1/4"
40:G1-1/2"
50:G2"
65:G2-1/2"
80:G3"

Actoator Size
40:40mm
50:50mm
63:63mm
90:90mm
100:100mm

Type
SC:Single Action Normal Close
SO:Single Action Normal Open
DC:Double Action Normal Close
DF:Double Action Free Installation

Body Material
Blank:S.S 304 (Standard)
316:S.S 316
316L:S.S 316L



Specifcation

Model	JZF10-80SC/SO/DC/DF
Port size	DN10-DN50
Thread	G3/8"-G3"
Welded	DIN11850　2 DIN11850　3 ISO2037
Valve bodv	CF8M
Actyator	CF8
Seat seals	PTFE
Stem seals	PTFE/FKM
Piston seals	FKM/NBR

Model	JZF10-80SC/SO/DC/DF
Applicable medium	Water,liquid,neutral gas,water steam slight corrosive gas and liquid
Temperature range	PTFE:-10℃ to +180℃
Ambient temperature	-10℃ to +60℃
Viscosity	max. 600mm^2/s
Installation	Any position
Controlling medium	Air or neutral gas
Controlling pressure range	0.3~1Mpa

Overall Dimensions

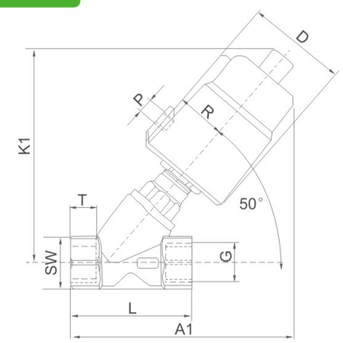

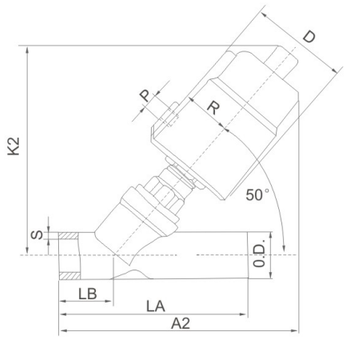

Dimension Sheet

Specification	Actuator (mm)	D	R	P	Thread						Welded					
					G	K1	A1	L	T	SW	OD.	K2	A2	LA	LB	S
DN10	40	53	28	G1/8"	G3/8"	105	144	65	12	25	/	/	/	/	/	/
DN15	50	56	35	G1/8"	G1/2"	142	182	76	14	28	21	115	142	100	18	3
DN20	50	56	35	G1/8"	G3/4"	152	189	92	16	32	27	131	170	117	30	3
DN25	50	56	35	G1/8"	G1"	155	207	103	21	39	34	138	175	130	30	3
DN25	63	70	43	G1/8"	G1"	176	217	103	21	39	34	166	200	130	30	3
DN32	63	70	43	G1/8"	G1-1/4"	177	222	112	19	49	42	172	207	145	30	3
DN40	63	70	43	G1/8"	G1-1/2"	182	225	129	21	56	48	174	207	160	30	4
DN50	63	70	43	G1/8"	G2"	196	249	143	27	68	60	193	227	190	30	4
DN50	90	94	56	G1/4"	G2"	206	268	143	27	68	60	202	235	190	30	4
DN65	90	94	56	G1/4"	G2-1/2"	215	290	186	28	84	76	209	255	230	40	5
DN80	125	135	73	G1/4"	G3"	295	335	218	34	101	/	/	/	/	/	/

方向控制元件 Valves & MANIFOLDS

Q22HD Series Right angle valve

Ordering Code

Q	22	HD	—	□	—	□	—	□
Right angle valve code	Two-position Two-way	Air control liquid valve		Connection Size 15:G1/2" 20:G3/4" 25:G1" 32:G1 1/4" 40:G1 1/2" 50:G2"		Type S:Single acting type D:Double acting type K:Normally open		Material Blank: Normal type H: High temperature type



Product Features

Classical design, durable Air control design, energy saving and environmental protection Big flow rate, safety and PrecisionCan work at low pressure, smartness for on and off, good seal performance.
There are two kinds of structure single acting type and double acting type.
Application: food, medicine, industry, abstersion, landification, printing, etc.
Remark: Normally open: Flow comes under the piston seal, against arrow on body.

Internal structure

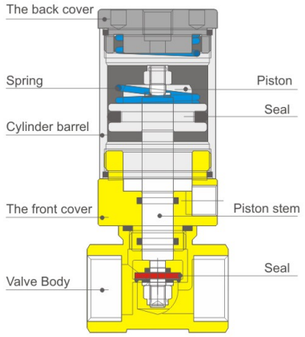

Specifcation

Model	Orifice	Medium	Working pressure	Temp range	Kv value(m^3/k)
Q22HD-15	15mm	Compress Air Water Oil	0.2~0.6MPa	−5−60℃ (High temperture) −5−150℃	4
Q22HD-20	20mm				5
Q22HD-25	25mm				10
Q22HD-32	32mm				25
Q22HD-40	40mm				25
Q22HD-50	50mm				40

Overall Dimensions

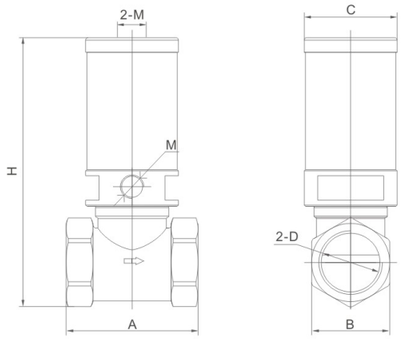

Dimension Sheet

Model	A	B	C	D	H	M
Q22HD-15	47	26	31	G1/2"	96	G1/8"
Q22HD-20	54	33	31	G3/4"	102	G1/8"
Q22HD-25	66	34	38	G1"	115	G1/8"
Q22HD-32	77	48	46	G1-1/4"	143	G1/8"
Q22HD-40	86	54	56	G1-1/2"	160	G1/8"
Q22HD-50	116	67	69	G2"	182	G1/8"

Ordering Code

4V	1	10	—	06	□	—	AC220V	—	□
Specification Code 4V:Two(Three)-position Five-way Solenoid ValVe 4A:Two(Three)-position Five-way pneumatic control valve 3V:Two-position Three-way Solenoid valve 3A:Two-position Three-way pneumatic control valve	Series Code 100 Series	Coil and Places 10:Single-head Double-position 20:Double-head Double-position 30C:Double-head Three-position Close Type 30E:Double-head Three-position Exhaust Type 30P:Double-head Three-position Pressure Type		Port Size M5:M5×0.8 06:G1/8"	Port connection and Initial State NC:Two-position Three-way Normal Close Type NO:Two-positiOn Three-way Normal Open Type		Standard Voltage DC12V DC24V AC24V 50Hz/60Hz AC110V 50Hz/60Hz AC220V 50Hz/60Hz AC380V 50Hz/60Hz		Wiring Form Blank:Standard Connector LD:Brown With Lighting Connector LD1:White With Lighting Connector W:Lead Wire Type

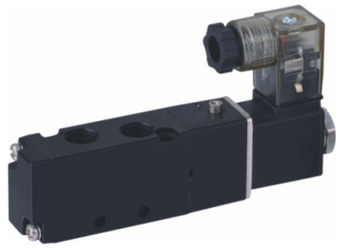



Specifcation

Model	4V110-M5	4V120-M5	4V130C-M5	4V130E-M5	4V130P-M5	4V110-06	4V120-06	4V130C-06	4V130E-06	4V130P-06
	4A110-M5	4A120-M5	4A130C-M5	4A130E-M5	4A130P-M5	4A110-06	4A120-06	4A130C-06	4A130E-06	4A130P-06
Position and Way NO.	Two-position Five-way		Three-position Five-way			Two-position Five-way		Three-position Five-way		
Effective Sectional Area	10mm²(CV=0.56)		7mm²(CV=0.40)			12mm²(CV=0.67)		9mm²(CV=0.5)		

Model	3V110-M5	3V120-M5	3A110-M5	3A120-M5	3VI10-06	3V120-06	3AI10-06	3A120-06
Position and Way NO.	Two-position Three-way				Two-position Three-way			
Effective Section Area	10mm²(CV=0.56)				12mm²(CV=0.67)			
Joint Pipe Bore	Air Inlet=Air Outlet=Exhaust=M5x0.8				Air Inlet=Air Outlet=Exhaust=GI/8"			
Working Medium	40 Micron Filtered Air							
Motion Pattern	Inner Guide Type							
Working-pressure	0.15~0.8 M Pa							
Max. Pressure Resistance	1.2MPa							
Operating Temperature	5~50℃							
Voltage Range	±10%							
Power Consumption	AC: 2.5VA DC: 2.5W							
Insulation & Protection Class	F Class. IP65							
Wiring Form	Lead Wire or Connector type							
Highest Action Frequency	5 Cycle / Second							
Shortest Excitation Time	0.05 Second							

Overall Dimensions

4V110–M5

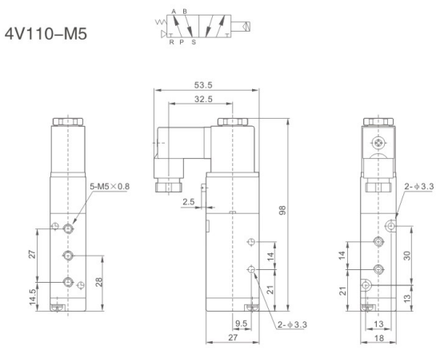

4V110–06

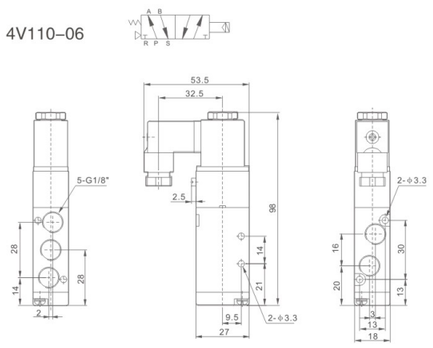

4V120–M5

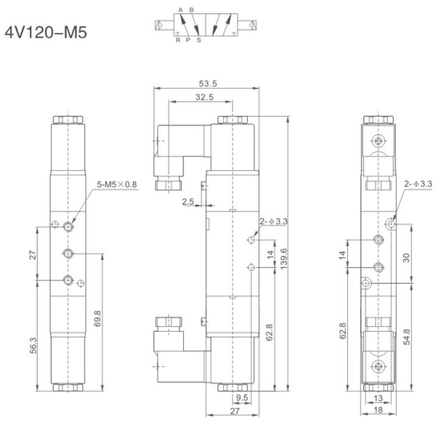

4V120–06

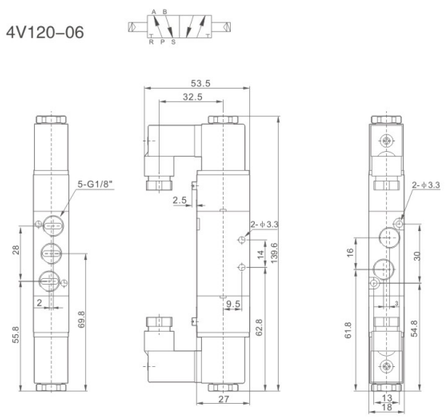

4V130–M5

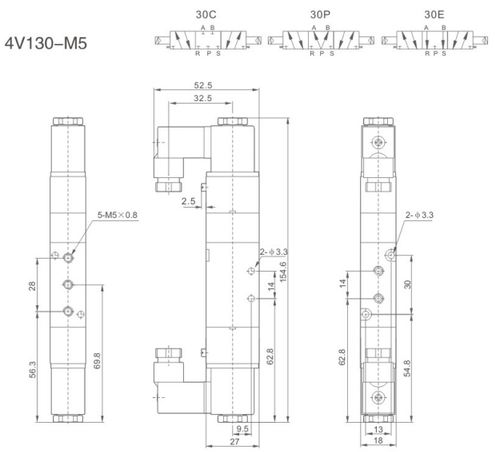

4V130–06

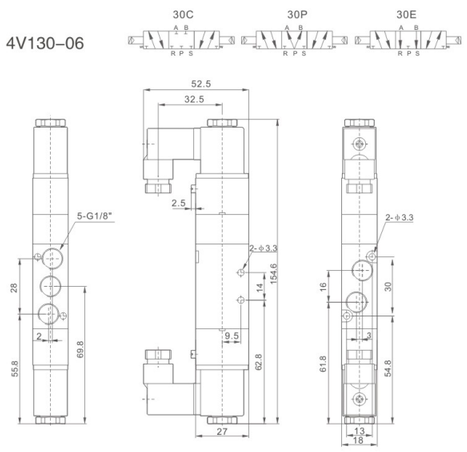

Ordering Code

4V	2	10	—	08	□	—	AC220V	—	□

Specification Code
4V:Two(Three)-position Five-way Solenoid Valve
4A:Two(Three)-position Five-way pneumatic control valve
3V:Two-position Three-way Solenoid Valve
3A:Two-position Three-way Pneumatic Control Valve

Series Code
200 Series

Coil and Places
10:Single-head double-position
20:Double-head double-position
30C:Double-head Three-position Close Type
30E:Double-head Three-position Exhaust Type
30P:Double-head Three-position Pressure Type

Port Size
06:G1/8"
08:G1/4"

Port connection and Initial State
NC:Two-position Three-way Normal Close Type
NO:Two-positiOn Three-way Normal Open Type

Standard Voltage
DC12V
DC24V
AC24V 50Hz/60Hz
AC110V 50Hz/60Hz
AC220V 50Hz/60Hz
AC380V 50Hz/60Hz

Wiring Form
Blank:Standard Connector
LD:Brown With Lighting Connector
LD1:White With Lighting Connector
W:Lead Wire Type



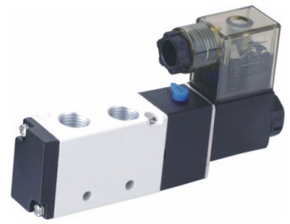

Specifcation

Model	4V210-06	4V220-06	4V230C-06	4V230E-06	4V230P-06	4V210-08	4V220-08	4V230C-08	4V230E-08	4V230P-08
	4A210-06	4A220-06	4A230C-06	4A230E-06	4A230P-06	4A210-08	4A220-08	4A230C-08	4A230E-08	4A230P-08
Position and Way NO.	Two-position Five-way		Three-position Five-way			Two-position Five-way		Three-position Five-way		
Effective Sectional Area	14mm²(CV=0.78)		12mm²(CV=0.67)			16mm²(CV=0.89)		12mm²(CV=0.67)		

Model	3V210-06	3V220-06	3A210-06	3A220-06	3V210-08	3V220-08	3A210-08	3A220-08
Position and Way NO.	Two-position Three-way				Two-position Three-way			
Effective Section Area	14mm²(CV=0.78)				16mm²(CV=0.89)			
Joint Pipe Bore	Air Inlet=Air Outlet=Exhaust=G1/8"				Air Inlet=Air Outlet 1/4" Exhaust=Gl/"1/8"			
Working Medium	40 Micron Filtered Air							
Motion Pattern	Inner Guide Type							
Working-pressure	0.15~0.8 M Pa							
Max. Pressure Resistance	1.2MPa							
Operating Temperature	5~50℃							
Voltage Range	±10%							
Power Consumption	AC: 2.5VA DC: 2.5W							
Insulation & Protection Class	F Class. IP65							
Wiring Form	Lead Wire or Connector type							
Highest Action Frequency	5 Cycle / Sec							
Shortest Excitation Time	0.05 Second							

Overall Dimensions

4V210–06

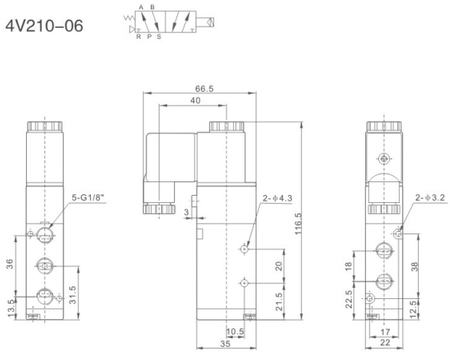

4V210–08

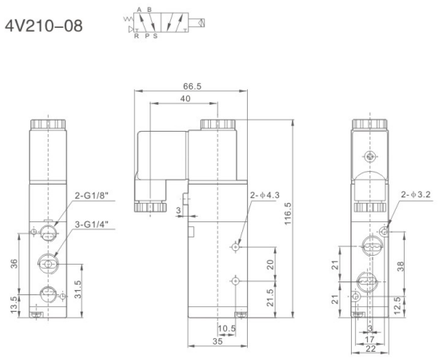

4V220–06

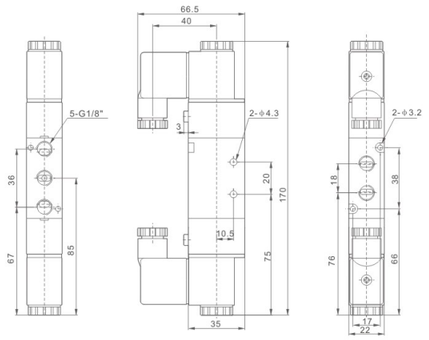

4V220–08

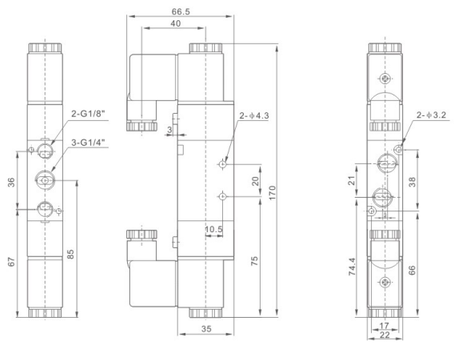

4V230–06

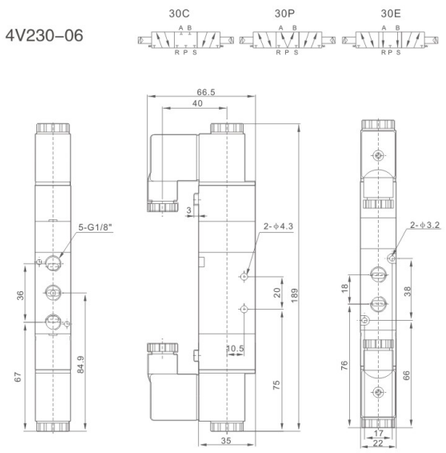

4V230–08

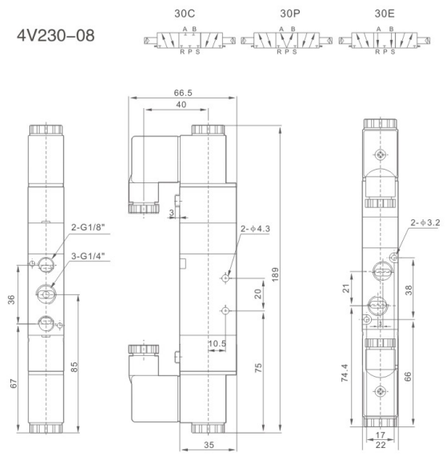

Ordering Code

4V	3	10	—	10	□	—	AC220V	—	□

Specification Code
4V:Two(Three)-position Five-way Solenoid Valve
4A:Two(Three)-position Five-way pneumatic control Valve
3V:Two-position Three-way Solenoid Valve
3A:Two-position Three-way Pneumatic Control Valve

Series Code
300 Series

Coil and Places
10:Single-head Double-position
20:Double-head Double-position
30C:Double-head Three-position Close Type
30E:Double-head Three-position Exhaust Type
30P:Double-head Three-position Pressure Type

Port Size
08:G1/4"
10:G3/8"

Port connection and Initial State
NC:Two-position Three-way Normal Close Type
NO:Two-position Three-way Normal Open Type

Standard Voltage
DC12V
DC24V
AC24V 50Hz/60Hz
AC110V 50Hz/60Hz
AC220V 50Hz/60Hz
AC380V 50Hz/60Hz

Wiring Form
Blank:Standard Connector
LD:Brown With Lighting Connector
LD1:White With Lighting Connector
W:Lead Wire Type





Specifcation

Model	4V310-08	4V320-08	4V330C-08	4V330E-08	4V330P-08	4V310-10	4V320-10	4V330C-10	4V330E-10	4V330P-10
	4A310-08	4A320-08	4A330C-08	4A330E-08	4A330P-08	4A310-10	4A320-10	4A330C-10	4A330E-10	4A330P-10
Position and Way NO.	Two-position Five-way		Three-position Five-way			Two-position Five-way		Three-position Five-way		
Effective Sectional Area	25mm²(CV=1.40)		18mm²(CV=1.00)			30mm²(CV=1.68)		18mm²(CV=1.00)		

Model	3V310-08	3V320-08	3A310-08	3A320-08	3V310-10	3V320-10	3A310-10	3A320-10
Position and Way NO.	Two-position Three-way				Two-position Three-way			
Effective Section Area	25mm²(CV=1.40)				30mm²(CV=1.68)			
Joint Pipe Bore	Air Inlet=Air Outlet=Exhaust=G1/4"				Air Inlet=Air Outlet=3/8" Exhaust=G1/4"			
Working Medium	40 Micron Filtered Air							
Motion Pattern	Inner Guide Type							
Working-pressure	0.15~0.8 M Pa							
Max. Pressure Resistance	1.2MPa							
Operating Temperature	5~50℃							
Voltage Range	±10%							
Power Consumption	AC: 4.5VA DC: 3W							
Insulation & Protection Class	F Class. IP65							
Wiring Form	Lead Wire or Connector Type							
Highest Action Frequency	5 Cycle / Sec							
Shortest Excitation Time	0.05 Second							

Overall Dimensions

4V310–08

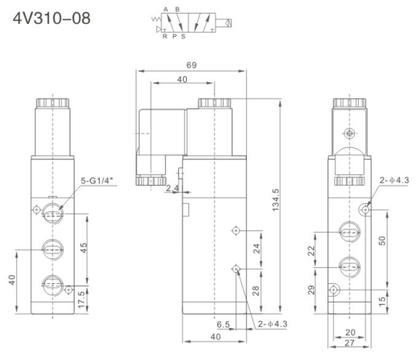

4V310–10

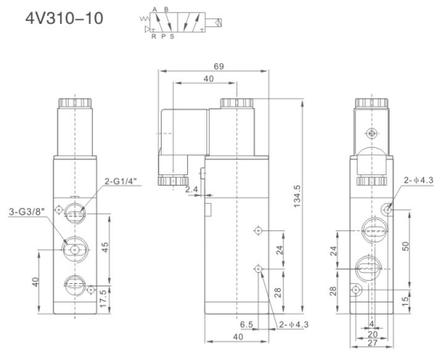

4V320–08

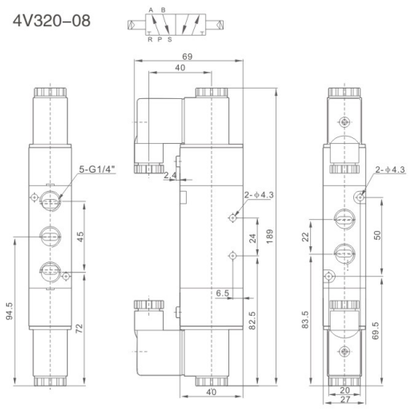

4V320–10

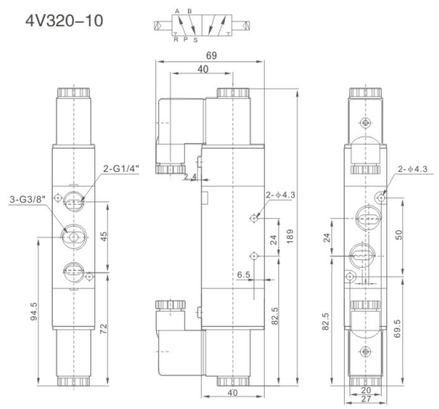

4V330–08

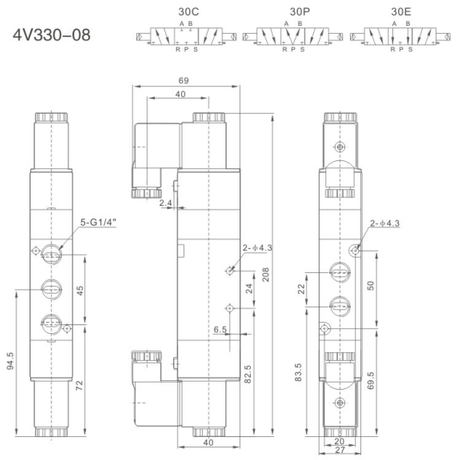

4V330–10

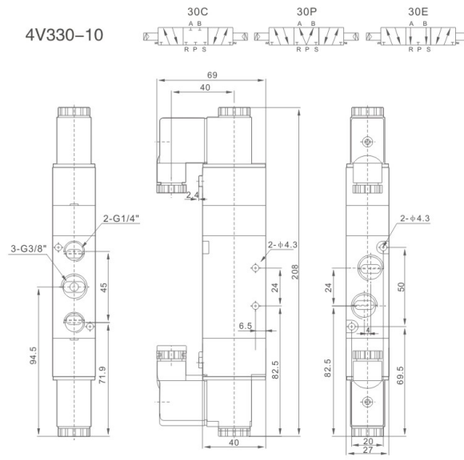

Ordering Code

4V	4	10	—	10	□	—	AC220V	—	□

Specification Code
4V:Two(Three)-position Five-way Solenoid Valve
4A:Two(Three)-position Five-way Pneumatic control Valve
3V:Two-position Three-way Solenoid Valve
3A:Two-position Three-way Pneumatic Control Valve

Series Code
400 Series

Coil and Places
10:Single-head Double-position
20:Double-head Double-position
30C:Double-head Three-position Close Type
30E:Double-head Three-position Exhaust Type
30P:Double-head Three-position Pressure Type

Port Size
10:G3/8"
15:G1/2"

Port connection and Initial State
NC:Two-position Three-way Normal Close Type
NO:Two-positiOn Three-way Normal Open Type

Standard Voltage
DC12V
DC24V
AC24V 50Hz/60Hz
AC110V 50Hz/60Hz
AC220V 50Hz/60Hz
AC380V 50Hz/60Hz

Wiring Form
Blank:Standard Connector
LD:Brown With Lighting Connector
LD1:White With Lighting Connector
W:Lead Wire Type





Specifcation

Model	4V410-15 / 4A410-15	4V420-15 / 4A420-15	4V430C-15 / 4A430C-15	4V430E-15 / 4A430E-15	4V430P-15 / 4A430P-15
Position and Way NO.	Two-position Five-way		Three-position Five-way		
Effective Sectional Area	50mm²(CV=2.79)		30mm²(CV=1.68)		

Model	3V410-15	3V420-15	3A410-15	3A420-15
Position and Way NO.	Two-position Three-way			
Effective Section Area	50mm²(CV=2.79)			
Joint Pipe Bore	Air Inlet=Air Outlet=Exhaust=G1/2"			
Working Medium	40 Micron Filtered Air			
Motion Pattern	Inner Guide Type			
Working-pressure	0.15~0.8 M Pa			
Max. Pressure Resistance	1.2MPa			
Operating Temperature	5~50℃			
Voltage Range	±10%			
Power Consumption	AC: 4.5VA DC: 3W			
Insulation & Protection Class	F Class. IP65			
Wiring Form	Lead Wire or Connector Type			
Highest Action Frequency	5 Cycle / Sec			
Shortest Excitation Time	0.05 Second			

Overall Dimensions

4V410–15

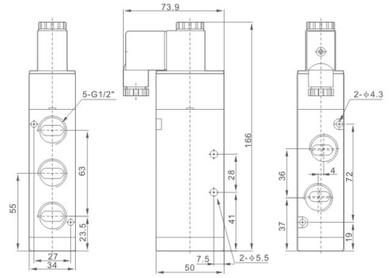

4V420–15

4V430–15

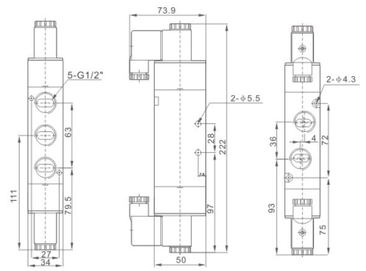

4A410–15

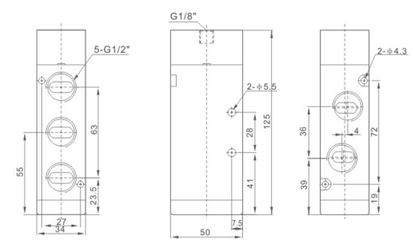

4A420–15

4A430–15

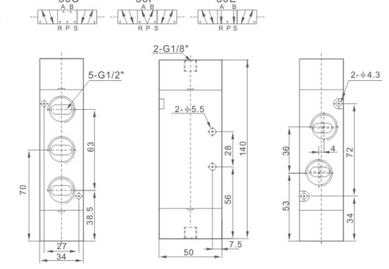

3V410–15

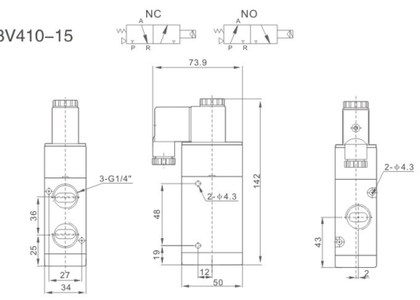

3V420–15

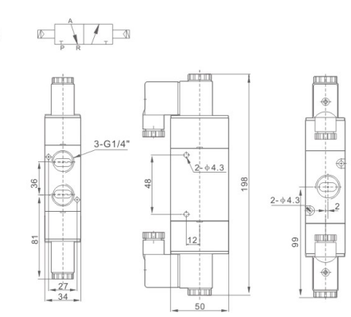

3A410–15

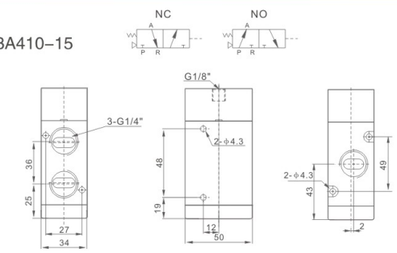

3A420–15

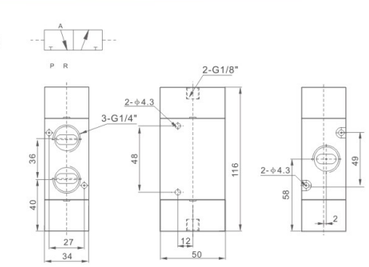

Ordering Code

4M	2	10	—	06	—	AC220V	—	□

Specification Code
4M:Two-position Five-way Plate Type Valve

Body Size
2:1/8" and 1/4" Valve body
3:1/4" and 3/8" Valve body

Coil and Places
10:Single-head Double-position
20:Double-head Double-position

Port Size
06:G1/8"
08:G1/4"
10:G3/8"

Standard Voltage
DC12V
DC24V
AC24V 50Hz/60Hz
AC110V 50Hz/60Hz
AC220V 50Hz/60Hz
AC380V 50Hz/60Hz

Wiring Form
Blank:Standard Connector
LD:Brown With Lighting Connector
LD1:White With Lighting Connector
W:Lead Wire Type

Graphic Symbol





4M210–08



4M310–10



4M220–08

Internal structure

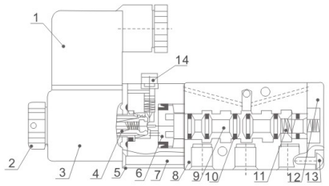

4M 210~310

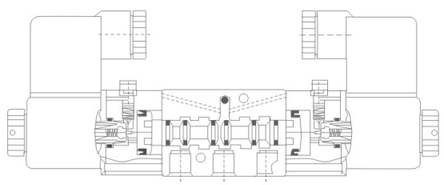

4M 220~320

NO	Designation	NO	Designation
1	Connector	8	Valve body
2	Nut	9	Spool
3	Coil	10	O-Ring
4	Pilot untis	11	Spring
5	Plate	12	Rear cover
6	Piston	13	Screw
7	Screw	14	Manual override

Dimension Sheet

Model	4M210-06	4M220-06	4M210-08	4M220-08	4M310-08	4M320-08	4M310-10	4M320-10
Working Medium	40 Micron Filtered Air							
Motion Pattern	Inner Guide Type							
Position and Way NO.	Two-position Five-way							
Effective Section Area	14mm²(CV=0.78)		16mm²(CV=0.89)		25mm²(CV=1.39)		30mm²(CV=1.67)	
Port Size	Air Inlet=Exhaust=G1/8"		Air Inlet=G1/4"/Exhaust=G1/8"		Air Inlet=Exhaust=G1/4"		Air Inlet=G3/8"Exhaust=G1/4"	
Lubricate	Not Necessary							
Working-Pressure	0.15~0.8MPa							
Max.Pressure Resistance	1.2MPa							
Operating Temperature	5~60℃							
Voltage Range	-15%~+10%							
Power Consumption	AC380V:2.5VA,AC220V:2.0VA,AC110V:2.5VA,AC24V:3.5VA,DC24V:3.0W,DC12V:2.5W							
Insulation & Protection Class	F Class.IP65							
Wiring Form	Lead wire or Connector Type							
Highest Action Frequency	5 Cycle / Sec							
Shortest Excitation Time	0.05 Second							

Overall Dimensions

4M210–06

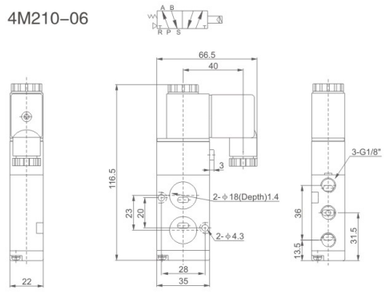

4M210–08

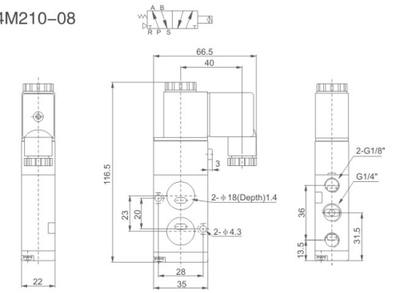

4M220–06

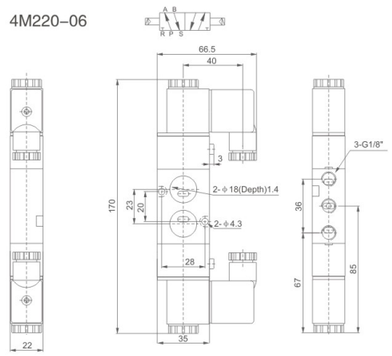

4M220–08

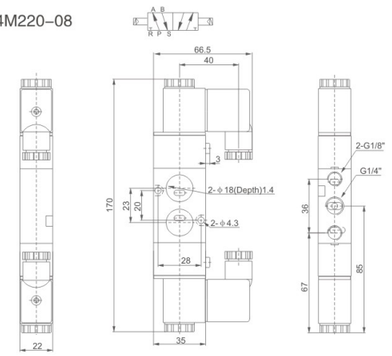

4M310–08

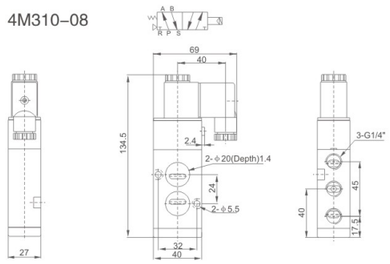

4M310–10

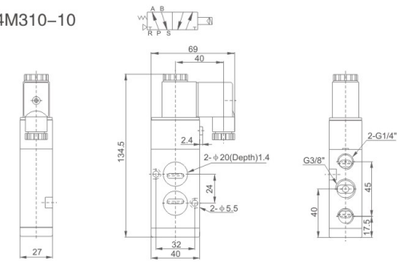

4M320–08

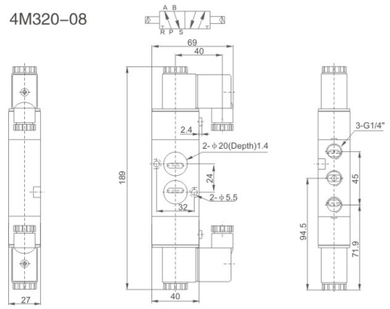

4M320–10

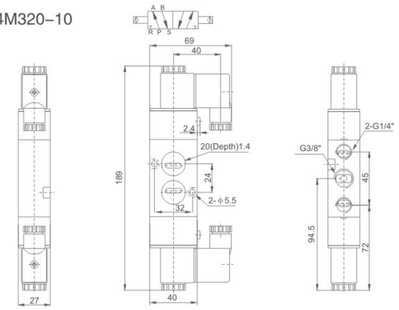

Ordering Code

VF3	1	—	30	AC220V	—	□

Series Code
VF3 Series
VF5 Series
VZ5 Series

Coil and Places
1:Single-Head Double-position
2:Double-Head Double-position
3:Double-Head Three-position Close Type
4:Double-Head Three-position Exhaust Type
5:Double-Head Three-position Pressure Type

Order No.
VF3:30
VF5:20
VZ5:20

Standard Voltage
DC12V
DC24V
AC24V 50Hz/60Hz
AC110V 50Hz/60Hz
AC220V 50Hz/60Hz
AC380V 50Hz/60Hz

Wiring Form
Blank:Standard Connector
LD:With Lighting Connector
W:Lead Wire Type



VF5120

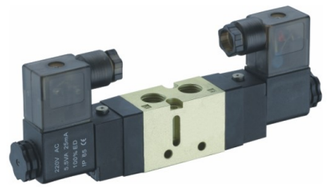

VF3230

Specifcation

Model	VF3130	VF3230	VF33(4/5)30	VF5120	VF5220	VF53(4/5)20	VZ5120	VZ5220	VZ53(4/5)20
Position and Way No.	Two-position Five-way		Three-position Five-way	Two-position Five-way		Three-position Five-way	Two-position Five-way		Three-position Five-way
Effective Section Area	16mm²(CV=0.89)		12mm²(CV=0.67)	25mm²(CV=1.40)		18mm²(CV=1.00)	12mm²(CV=0.67)		9mm²(CV=0.50)
Working Medium	40 Micron Filtered Air								
Motion Pattern	Inner Guide Type								
Working-Pressure	0.15~0.8MPa								
Max.Pressure Resistance	1.2MPa								
Operating Temperature	5~50℃								
Voltage Range	±10%								
Power Consumption	AC:4.5VA DC:3W								
Insulation & Protection Class	IP65/F Class.IP65								
Wiring Form	Lead Wire or Connector Type								
Highest Action Frequency	5 Cycle / Sec								
Shortest Excitation Time	0.05 Second								

Overall Dimensions

VF3130

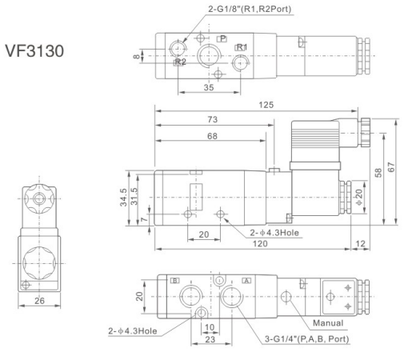

VF3230

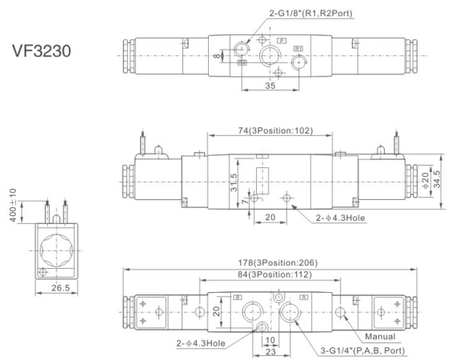

VF5120

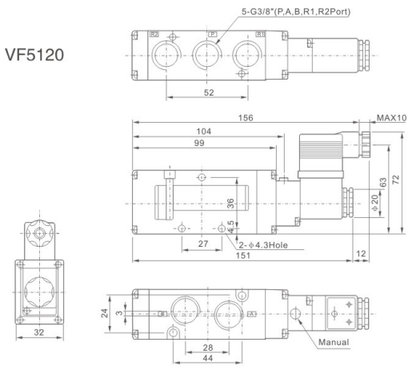

VF5220

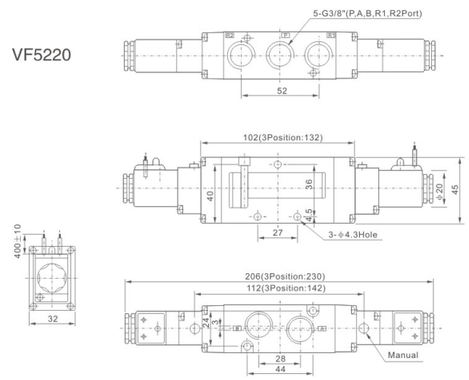

VZ5120

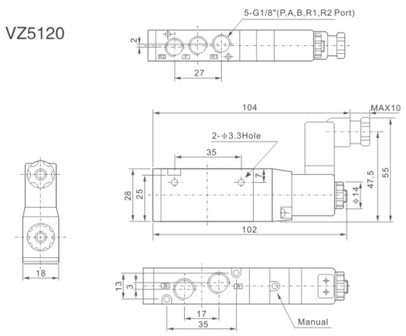

VZ5220

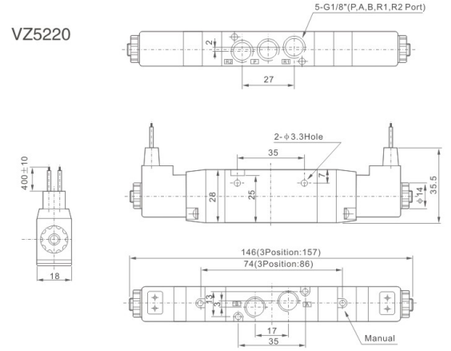

Ordering Code

3V | 1 | 06 | — | B | — | AC220V | — | □

Specification Code
3V: Two-position Three-way Solenoid Valve

Series Code
100 Series

Port Size
M5:M5×0.8
06:G1/8"

Connecting Type
Blank:Pipe Connection Type
B:Plate Connection Type

Standard Voltage
DC12v
DC24v
AC24v 50Hz/60Hz
AC110v 50Hz/60Hz
AC220v 50Hz/60Hz
AC380v 50Hz/60Hz

Wiring Form
Blank:Standard Connector
G:Lead Wire Type
L:With Lighting Connector



3V1–06

Overall Dimensions

3V1–06

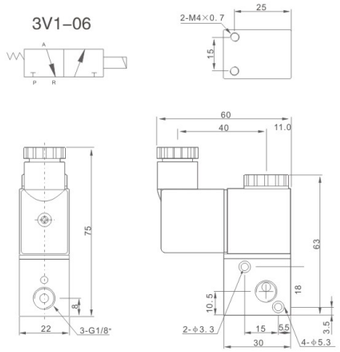

Specifcation

Model	3V1-M5	3V1-06
Working Medium	40 Micron Filtered Air	
Motion Pattern	Direct Drive Type	
Joint Pipe Bore	M5	1/8"
Ambient Temperature	-10~+60℃	
Gas Temperature	5~60℃	
Air Outlet Diameter	1.0mm	
Lubrication	Not Necessary	
Working-pressure	0~0.8MPa	
Max.Pressure Resistance	1.2MPa	
Power Consumption	AC:4.5VA DC:3.0W	
Protect Class	IP65	
Power Connection Form	Gorl	
Material of Body	Aluminum alloy	
Highest Action Frequency	10Cycle / Sec	
Insulation	F Class	
Voltage Range	±10%	
Shortest Excitation Time	0.05 Second	

Overall Dimensions

3V1–06–3F

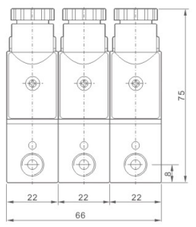

3V1–06B–3F

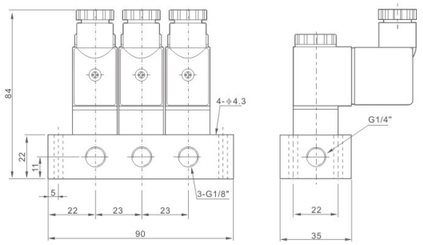

3V1–06B

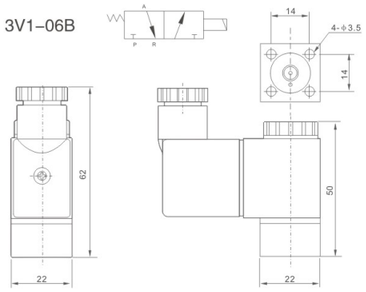

Base For 4V、4A Series Valve

Ordering Code

4V — 100M — □F

Series Code
4V:For 4V Series ues
4A:For 4A Series ues

Specification Code
100M:Base for 100 Series Use
200M:Base for 200 Series Use
300M:Base for 300 Series Use
400M:Base for 400 Series Use

Joint Base Number
100M:Wantonly Joint
200M:Wantonly Joint
300M:Wantonly Joint
400M:Wantonly Joint



Overall Dimensions

4A Series

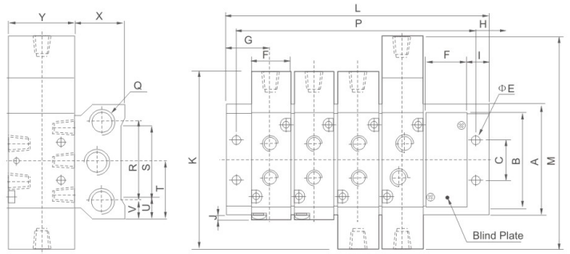

4V Series

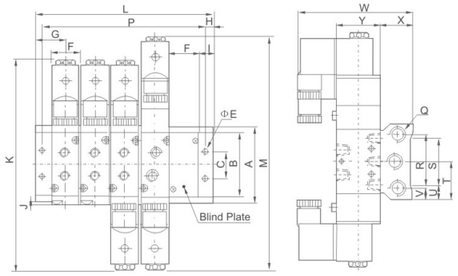

4A Series

Model	A	B	C	E	F	G	H	I	J	K	L														
											1F	2F	3F	4F	5F	6F	7F	8F	9F	10F	11F	12F	13F	14F	15F	16F
100M-□F	58	43.2	20	4.5	18.3	19	5	10	0.8	139.4	38	57	76	95	114	133	152	171	190	209	228	247	266	285	304	323
200M-□F	61	50.7	21	4.5	22.4	23	6	12	1.2	170	46	69	92	115	138	161	184	207	230	253	276	299	322	345	368	391
300M-□F	75	64.8	26	4.5	27.3	27	6	13.5	2.5	188.8	54	82	110	138	166	194	22	250	278	306	334	362	-	-	-	-
400M-□F	104	94.5	32	5.5	34.3	31.5	7	14.5	5	221.8	63	98	133	168	203	238	273	-	-	-	-	-	-	-	-	-

Model	M	P															Q	R	S	T	U	V	W	X	Y
		1F	2F	3F	4F	5F	6F	7F	8F	9F	10F	11F	12F	13F	14F	15F	16F									
100M-□F	154.5	28	47	66	85	104	123	142	161	180	199	218	237	256	275	294	313	G1/4"	40	30	29	14	9	79	25	27
200M-□F	189	34	57	80	103	126	149	172	195	218	241	264	287	310	333	256	379	G1/4"	43	32	30.5	14.5	9	93	26	35
300M-□F	208	42	70	98	126	154	182	210	238	266	294	322	350	-	-	-	-	G3/8"	53	48	37.5	13.5	11	99.5	30	40
400M-□F	243	49	84	119	154	189	224	259	-	-	-	-	-	-	-	-	-	G1/2"	68	67	52	18.5	18	112.5	38	50

4V Series

Model	A	B	C	E	F	G	H	I	J	K	L														
											1F	2F	3F	4F	5F	6F	7F	8F	9F	10F	11F	12F	13F	14F	15F	16F
100M-□F	58	43.2	20	4.5	18.3	19	5	10	0.8	81	38	57	76	95	114	133	152	171	190	209	228	247	266	285	304	323
200M-□F	61	50.7	21	4.5	22.4	23	6	12	1.2	92	46	69	92	115	138	161	184	207	230	253	276	299	322	345	368	391
300M-□F	75	64.8	26	4.5	27.3	27	6	13.5	2.5	111	54	82	110	138	166	194	22	250	278	306	334	362	-	-	-	-
400M-□F	104	94.5	32	5.5	34.3	31.5	7	14.5	5	142	71	98	133	168	203	238	273	-	-	-	-	-	-	-	-	-

Model	M	P															Q	R	S	T	U	V	X	Y
		1F	2F	3F	4F	5F	6F	7F	8F	9F	10F	11F	12F	13F	14F	15F	16F								
100M-□F	96	28	47	66	85	104	123	142	161	180	199	218	237	256	275	294	313	G1/4"	40	30	29	14	9	25	27
200M-□F	111	34	57	80	103	126	149	172	195	218	241	264	287	310	333	256	379	G1/4"	43	32	30.5	14.5	9	26	35
300M-□F	130	42	70	98	126	154	182	210	238	266	294	322	350	-	-	-	-	G3/8"	53	48	37.5	13.5	11	30	40
400M-□F	163	49	84	119	154	189	224	259	-	-	-	-	-	-	-	-	-	G1/2"	68	67	52	18.5	18	38	50

Base For VF、VZ Series Valve

Ordering Code

VF3000M — □F

Specification Code
VF3000M:For VF3 Series Use
VF5000M:For VF5 Series Use
VZ5000M:For VZ5 Series Use

Joint Base Number
VF3000M:Wantonly Joint
VF5000M:Wantonly Joint
VZ5000M:Wantonly Joint



Overall Dimensions

VF3000M

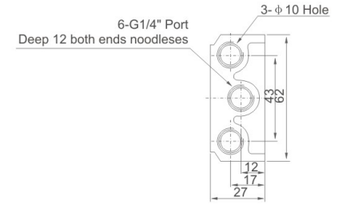

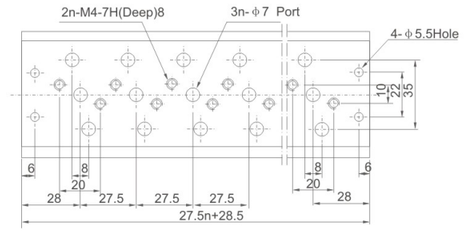

VF5000M

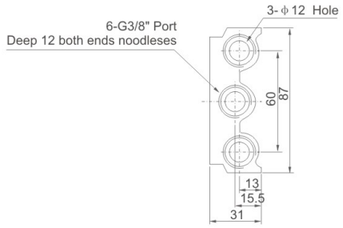

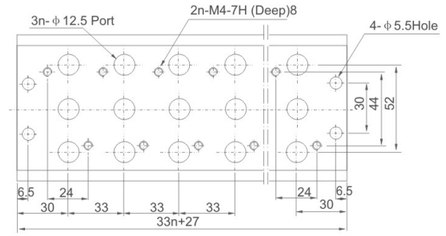

VZ5000M

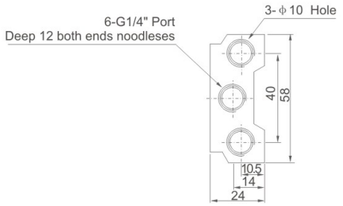

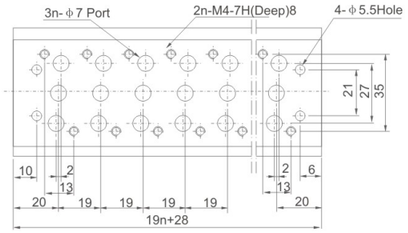

Blind plate for 4V、4A Series Valve



Ordering Code

4V、4A — 100M — B

Series Code
4M:For 4M Series ues

Specification Code
100M:For 100 Series Use
200M:For 200 Series Use
300M:For 300 Series Use
400M:For 400 Series Use

Blind Plate Code
B:Base Purposed Blind Plate

Blind plate Operating Instructions: When base quantity is more than solenoid (pneumatic) valve quantity, can use blind plate to seal the redundant valve base temporary, and then change it if add extra solenoid (pneumatic) valve. Like this can expand system.

MSV Series Mechanical Valve

Ordering Code

MSV | 98 | 32 | 1 | R

Specification Code
Mechanical Valve

Series Code
98 Series
86 Series

Position and Way No
32:Two-position Three-way
52:Two-position Five-way

Port Size
1:G1/8"
2:G1/4"

Button Type
Blank:Normal Type
R: Roller Type
TB:Selective Knob
LB:Strengthened Knob
PB:Large Round Button
PP:Plat Round Button
PPL:Convex Round Button
EB:With Lock Button

Specifcation

Model	MSV86321	MSV86522	MSV98322
Working Medium	40 Micron Filtered Air		
Position and Way No.	Two-position Three-way	Two-position Five-way	Two position Three-way
Effective Section Area	12mm² (CV=0.67)	16mm²(CV=0.89)	16mm²(CV=0.89)
Port Size	G1/8"	G1/4"	G1/4"
Pressure Range	0~0.8Mpa		
Temperature Range	0~60℃		



MSV86522–EB | MSV86522–PB | MSV86522–TB | MSV86522–LB | MSV86522–PP | MSV86522–PPL | MSV86522–R

Overall Dimensions

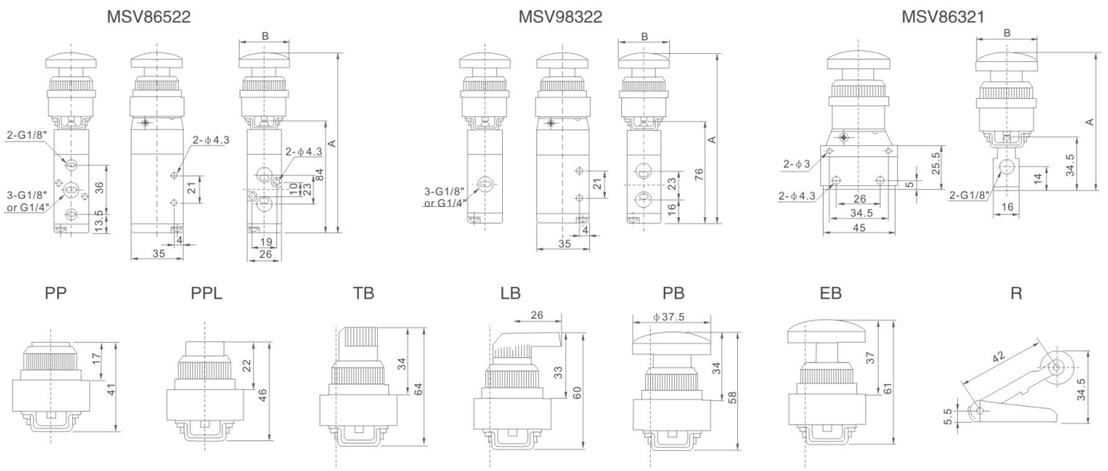

Dimension Sheet

Series	Symbol/Model	PP	PPL	LB	TB	EB	PB	R
MSV86522	A	114	119	133	136.5	134	131	107.5
	B	39.5	24.5	26.5	36.5	39.5	37.5	42.5
MSV98322	A	106	111	125	129.5	126	123	99.5
	B	39.5	24.5	26.5	36.5	39.5	37.5	42.5
MSV86321	A	66	71	85	88.5	86	83	59.5
	B	39.5	24.5	26.5	36.5	39.5	37.5	42.5

JM Series Mechanical Valve

Ordering Code

JM — 05

Specification Code
Stop-type Mechanical Valve

Button Type
05:Selective Knob
06:With Lock Button
06A:Plat Round Button
07:Roller Type



JM–05 | JM–06 | JM–06A | JM–07

Specifcation

Model	JM-05	JM-06	JM-06A	JM-07
Working Medium	40 Micron Filtered Air			
Position and Way No.	Two-position Three-way,Two-position Two-way			
Port Size	G1/4"			
Working-pressure Range	0~0.8MPa			
Operating Temperature	0~60℃			

Overall Dimensions

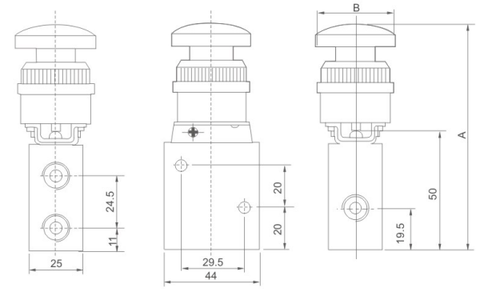

Dimension Sheet

Model	JM-05	JM-06	JM-06A	JM-07
A	114	111	96	84.5
B	36.5	39.5	39.5	42.5

MOV Series Mechanical Valve

Ordering Code

MOV — 01

Specification Code
Machine-Control,
Hand-Control Valve

Button Type
01:Selective Knob
02:Roller Type
03:With Lock Button
04:Plat Round Button



MOV–01 | MOV–02 | MOV–03 | MOV–04

Specifcation

Model	MOV-01	MOV-02	MOV-03	MOV-04
Working Medium	Air			
Position and Way No.	Two-position Two-way			
Port Size	G1/8"			
Working-pressure Range	0~0.8MPa			
Operating Temperature	0~70℃			

Overall Dimensions

MOV–02

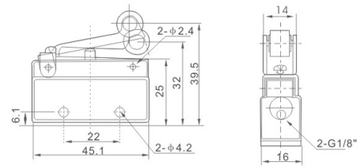

MOV–01

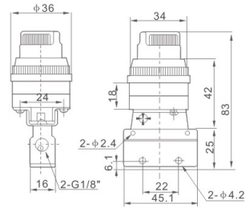

MOV–03

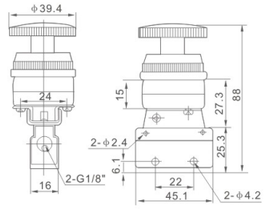

MOV–04

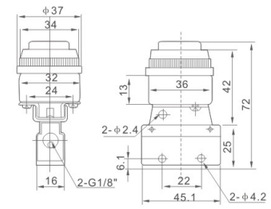

Valves & MANIFOLDS 方向控制元件

4R Series Hand-draw Valve

Ordering Code

4R	2	10	06

Specification Code
4R:Two-position Five-way Hand-draw Valve
3R:Two-position Three-way Hand-draw Valve

Series Code
100 Series
200 Series
300 Series
400 Series

Number of Places
10:Single-head Double-position

Port Size
06:G1/8″
08:G1/4″
10:G3/8″
15:G1/2″



4R110–06



4R210–08



3R210–08

Specifcation

Model	4R110-06	4R210-08	4R310-10	4R410-15	3R110-06	3R210-08	3R310-10	3R410-15
Working Medium	Compresse Air							
Position and Way No.	Two-position Five-way				Two-position Three-way			
Joint Pipe Bore	G1/8"	G1/4"	G3/8"	G1/2"	G1/8"	G1/4"	G3/8"	G1/2"
Working-pressure Range	0~1.0MPa							
Operating Temperature Range	-5~60℃							
Operating Method	Direct Action Type							
Lubrication	Not Required							

Overall Dimensions

4R210–08

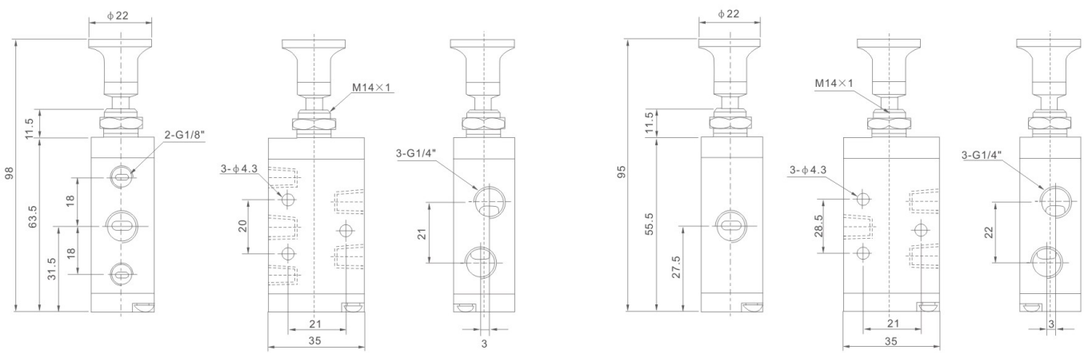

3R210–08

Ordering Code

HV	—	02	□	K	34	—	R_8	L8	D

Series Code
HV Series

Port Size
02:G1/4"
03:G3/8"
04:G1/2"

Joint Pipe Type
Blank:Pipe Connection Type
B:Plate Connection Type

Series Code
K Series

Position and way No.
24:Two-position Four-way
34:Three-position Four-way

Type Code
R_8:Hand-switching Valve

Port Size
L6:G1/8"
L8:G1/4"

Base Joint



HV–03



K34R–08



K34–R–L8D



K34–R–L6D

Specifcation

Model	HV-02	HV-03	HV-04	$K34R_8$-L6	$K34R_8$-L8
Working Medium	40 Micron Filtered Air				
Effective Sectional Atea	30mm²(cv+1.68)			18mm²(cv+1.00)	
Port Size	G1/4"	G3/8"	G1/2"	G1/8"	G1/4"
Working-pressure Range	0~0.8MPa				
Operating Temperature Range	0~60℃				

Overall Dimensions

HV

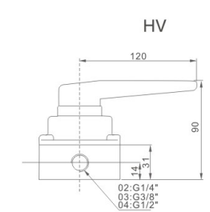

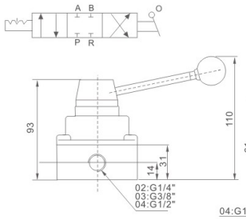

K34R-08

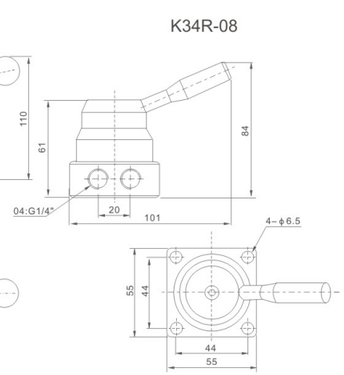

4HV Series Hand-switching Valve



Ordering Code

4HV	230	—	08	—	T

Series Code
4HV Series

Positiom and way No
230: Three-position Four-way
330: Three-position Four-way

Port Size
08: G1/4"
10: G3/8"
15: G1/2"

Install Type
Blank: Body of Valve Install
T: Panel Install

TSV Series Hand-pull Valve

Ordering Code

TSV86 | 52 | 2 — M

- **Specification Code** Hand-pull Valve
- **Position and Way NO.** Two-position Five-way
- **Port Size** 1:G1/8" 2:G1/4"
- **Type Code** M:Machinery Locking Type S:Spring Return Type

TSV98 | 32 | 2 — M

- **Specification Code** Hand-pull Valve
- **Position and Way NO.** Two-position Three-way
- **Port Size** 1:G1/8" 2:G1/4"
- **Type Code** M:Machinery Locking Type S:Spring Return Type



TSV86522–M



TSV98322–M

Specifcation

Model	TSV86522M/S	TSV98322M/S
Working Medium	40 Micron Filtered Air	
Motion Pattern	Direct Drive Type	
Effective Sectional Area	18mm²(CV=1.00)	
Port Size	G1/4	
Working-pressure Range	0~1.0MPa	
Operating Temperature Range	0~60℃	

Overall Dimensions

TSV86522



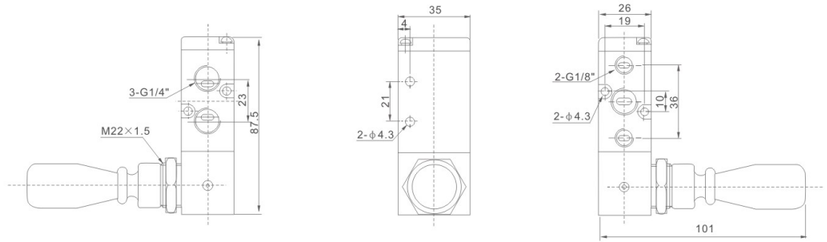

TSV98322



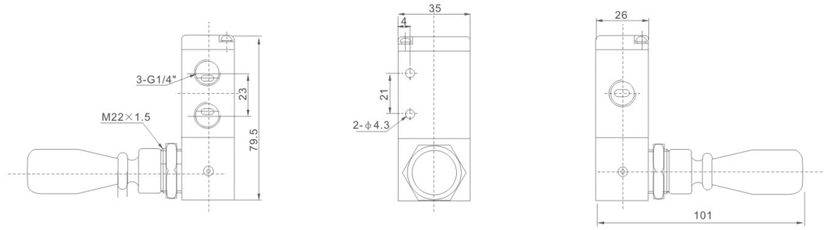

4H Series Hand-pull Valve

Ordering Code

4H | 2 | 10 — 06 — □

- **Specification Code** 4H:Two(Three)-position Five-way Hand Pull Valve
- **Positiom and way No** 2:200 Series 3:300 Series 4:400 Series
- **Number of places** 10:Single-head Double-position 30:Single-head Three-position
- **Port Size** 06:G1/8" 08:G1/4" 10:G3/8" 15:G1/2"
- **Type Code** Blank:Two-Position Five-way lock tpye L:Three-Position Five-way lock tpye S:Two(Three)- Position Five-way spring return type



4H330–10



4H210–06

Specifcation

Model	4H210-06	4H210-08	4H230-08	4H310-08	4H310-10	4H330-10	4H410-15	4H430-15
Working Medium	40 Micron Filtered Air							
Motion Pattern	Direct Drive Type							
Effective Section Area	14mm²(CV=0.78)	16mm²(CV=0.89)	12mm²(CV=0.67)	25mm²(CV=1.4)	30mm²(CV=1.68)	30mm²(CV=1.68)	50mm²(CV=2.79)	50mm²(CV=2.79)
Port Size	Air Inlet=Air Outlet= Exhaust=G1/8"	Air Inlet=Air Outlet= Exhaust=G1/4"		Air Inlet=Air Outlet= Exhaust=G1/4"	Air Inlet=Air Outlet= G3/8" Exhaust=G1/4"		Air Inlet=Air Outlet= Exhaust=G1/2"	
Working-Pressure Range	0~1.0MPa							
Operating Temperature Range	0~60℃							

Overall Dimensions

4H Series



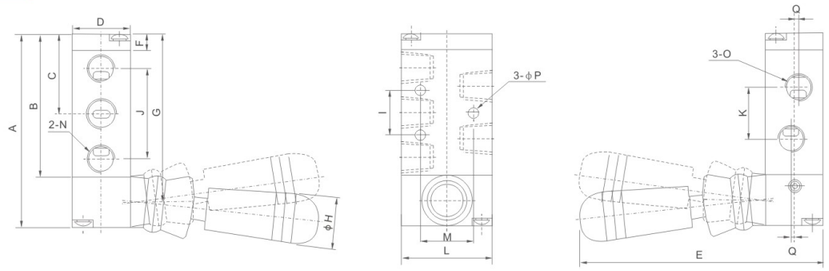

Dimension Sheet

Symbol/Model	A	B	C	D	E	F	G	H	I	J	K	L	M	N	O	P	Q
4H210-06	76.5	56.5	31.5	22	95	6.5	66.5	18	20	36	21	35	21	G1/8"	G1/8"	4.3	-
4H230-06	76.5	56.5	31.5	22	95	6.5	66.5	18	20	36	21	35	21	G1/8"	G1/8"	4.3	-
4H230-06(S)	97.5	75.5	31.5	22	95	6.5	85.5	18	20	36	21	35	21	G1/8"	G1/8"	4.3	-
4H210-08	76.6	56.5	31.5	22	95	6.5	66.5	18	20	36	21	35	21	G1/8"	G1/4"	4.3	1.5
4H230-08L	97.5	75.5	31.5	22	95	6.5	66.5	18	20	36	21	35	21	G1/8"	G1/4"	4.3	1.5
4H230-08(S)	97.5	75.5	31.5	22	95	6.5	85.5	18	20	36	21	35	21	G1/8"	G1/4"	4.3	1.5
4H310-08	92	72.5	40	27	100	7.5	82.5	18	24	45	24	40	27	G1/4"	G1/4"	4.3	-
4H310-10	92	72.5	40	27	100	7.5	52.5	18	24	45	24	40	27	G1/4"	G3/8"	4.3	2
4H410-15	126	102	55.5	34	100	7.5	114	18	28	63	36	50	35	G1/2"	G1/2"	5.5	-

Ordering Code

4F	2	10	—	08	—	□		FV	—	320

Specification Code
4F:Two-position Five-way Foot Valve

Series Code
2:200 Series

Number of Places
10:Single-head Double-position

Port Size
08:G1/4"

Type Code
Blank:Standard Type
L:With Lock
G:With Cover
LG:With Lock And Cover

Specification Code
FV:Foot Valve

Position and way No
320:Two-position Three-way
420:Two-position Four-way


4F210–08L


4F210–08


FV420


4F210–08LG

Specifcation

Model	4F210-06	4F210-08L	4F210-08G	4F210-08LG	FV420	FV320
Working Medium	40 Micron Filtered Air					
Position and Way Number	Two-position Five-way				Two-position Four-way	Two-position Three-way
Motion Patten	Direct Drive Type					
Port Size	Air Inlet=Air Outlet=Exhaust=G1/4"				Air Inlet=Air Outlet=G1/4" Exhaust=G1/8"	
Working-pressure Range	0.15~0.9MPa					
Operating Temperature Range	0~60℃					

Overall Dimensions

4F210–08

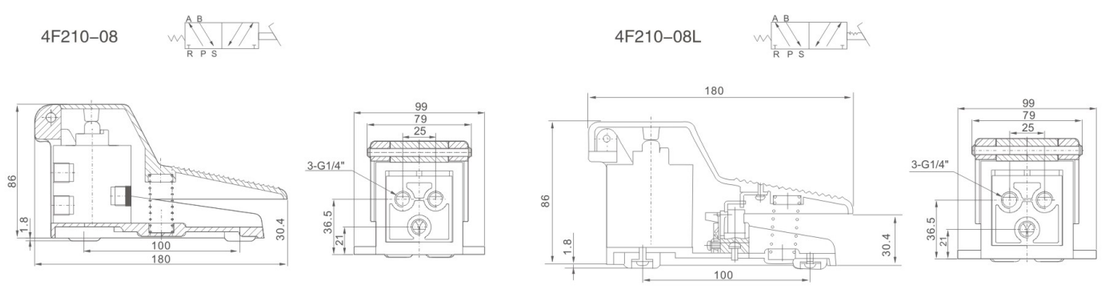

4F210–08L

Overall Dimensions

4F210–08G

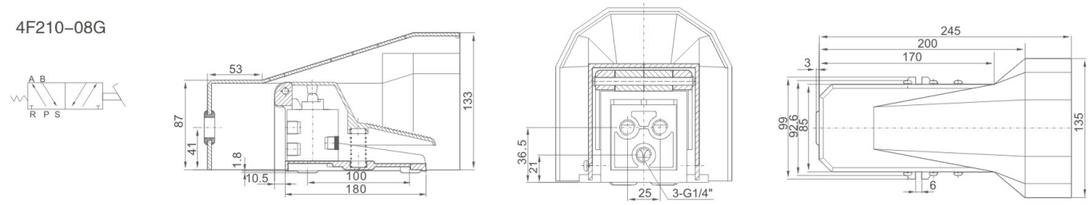

4F210–08LG

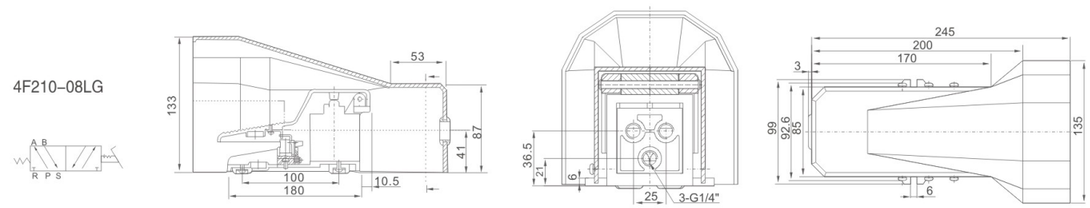

FV420

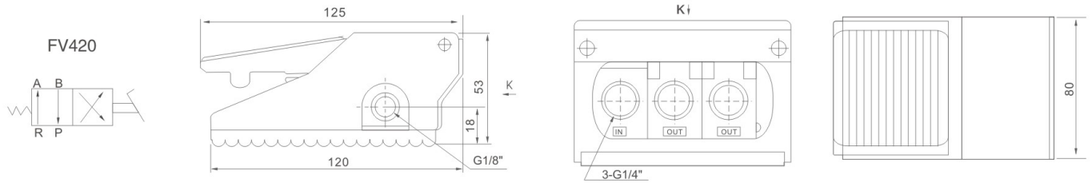

FV320

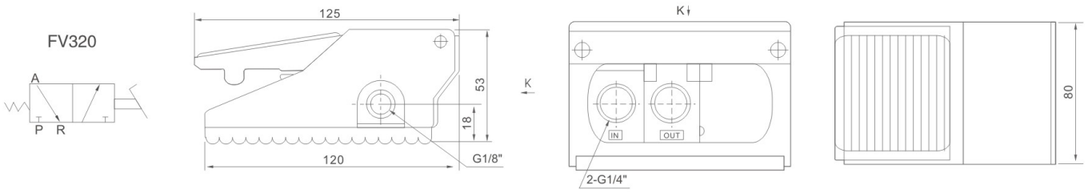

RE Series Flow Control Valve

Ordering Code

RE — 01

Series Code
RE:Ordinary Type
Flow Control Valve

Port Size
01:G1/8"
02:G1/4"
03:G3/8"
04:G1/2"



Graphic Symbol



Specifcation

Model	RE-01	RE-02	RE-03	RE-04
Port Size	G1/8"	G1/4"	G3/8"	G1/2"
Working Medium	Air			
Working-pressure Range	0~0.95MPa			
Operating Temperature Range	0~60℃			

Overall Dimensions

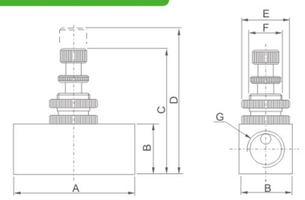

Dimension Sheet

Model	A	B	C	D	E	F	G
RE-01	45	19	43	50	Φ19	M14×1	G1/8
RE-02	45	19	43	50	Φ19	M14×1	G1/4
RE-03	55	25	55	62	Φ25	M18×1	G3/8
RE-04	55	25	55	62	Φ25	M18×1	G1/2

ASC Series Check Valve

Ordering Code

ASC — 08

Series Code
ASC:Accurate Type
Flow Control Valve

Port Size
06:G1/8"
08:G1/4"
10:G3/8"
15:G1/2"



Graphic Symbol



Specifcation

Model	ASC-06	ASC-08	ASC-10	ASC-15
Port Size	G1/8"	G1/4"	G3/8"	G1/2"
Working Medium	Air			
Working-pressure Range	0~0.95MPa			
Operating Temperature Range	0~60℃			

Overall Dimensions

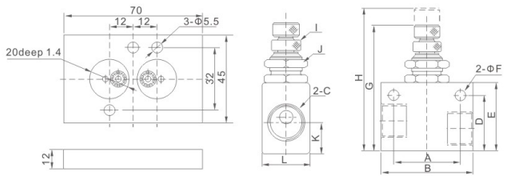

Dimension Sheet

Model	A	B	C	D	E	F	G	H	I	J	K	L
ASC-06	22	32	G1/8	22	27	4.3	49.7	56.5	M6×0.5	M12×0.75	12	18
ASC-08	26	36	G1/4	22	27	4.3	49.7	56.5	M6×0.5	M12×0.75	12	18
ASC-10	28	40	G3/8	25	30	4.3	52.7	59.5	M6×0.5	M12×0.75	13	22
ASC-15	28	40	G1/2	30	35	4.3	58.7	65.5	M6×0.5	M12×0.75	13.5	26

KLA Series Check Valve

Ordering Code

KLA — 10

Series Code
KLA:Check Valve

Port Size
06:G1/8"
08:G1/4"
10:G3/8"
15:G1/2"

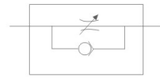

Graphic Symbol



Specifcation

Model		KLA-06	KLA-08	KLA-10	KLA-15
Working Medium		Air			
Port Size		G1/8"	G1/4"	G3/8"	G1/2"
Working-pressure Range		0.5~0.95 Kgf/cm²			
Ensured Pressure Resistance		15.0 Kgf/cm²			
Operating Temperature Range		-5~60℃			
Body of Material		Aluminum Alloy Lyl2			
Standard Rated Flow(L/min)	Check Valve	200	450	1250	1650
	One-way Valve	400	800	1500	2000

Overall Dimensions

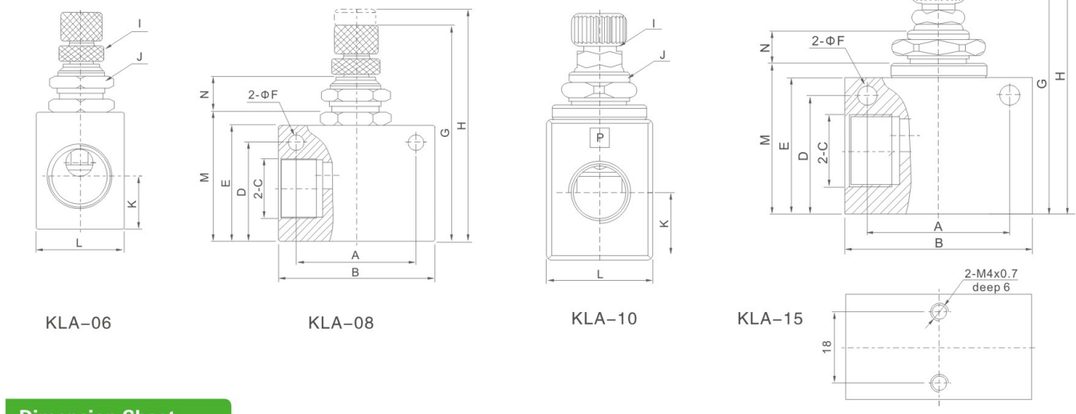

KLA–06 KLA–08 KLA–10 KLA–15

Dimension Sheet

Model	A	B	C	D	E	F	G	H	I	J	K	L	M	N
KLA-06	22	32	PT1/8	18	23	4.3	46.8	52.3	M6×0.5	M12×0.75	10	18	26	8.6
KLA-08	26	36	PT1/4	23	27	4.3	50.8	56.3	M6×0.5	M12×0.75	13.5	18	30	8.6
KLA-10	35	50	G3/8	32	37	5.3	65	74	M8× 0.75	M16 ×1	17.5	28	40.5	10.2
KLA-15	35	50	G1/2	32	37	5.3	65	74	M8×0.75	M16 ×1	17.5	28	40.5	10.2

KA Series Check Valve

Ordering Code

KA — L8

Series Code
KA:Check Valve

Port Size
L06:G1/8"
L08:G1/4"
L10:G3/8"
L15:G1/2"
L20:G3/4"
L25:G1"
L32:G1-1/4"
L40:G1-1/2"
L50:G2"



Product instruction

The valve is undirectional control element. When passing the valve,the working medium can only flow along a given direction.In operation,when the medium pressure direction changes,the valve functions to stop the return of the medium in the system.Therefore,the product is also called non-return valve.

Graphic Symbol



Specifcation

Model	KA-L06	KA-L08	KA-L10	KA-L15	KA-L20	KA-L25	KA-L32	KA-L40	KA-L50
Working-pressure	0.05~0.8MPa								
Environment Temperature	-10~+55℃								
Medium Temperature	0~+55℃								
Circulating Ability	10	20	40	60	110	190	300	400	650
Startup Ability	≤0.03MPa								
Leak Out Flow(cm^3/min)	50	50	120	120	250	250	500	500	500
Respond Time(Sec)	0.03								
Life(Ten Thousand Times)	≥150								

Overall Dimensions

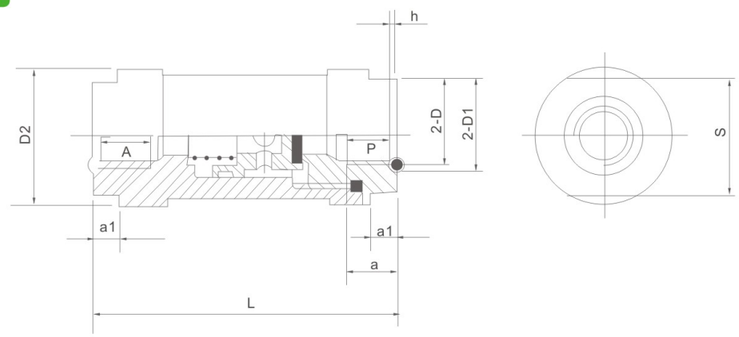

Dimension Sheet

Model	Joint Pipe Code	D	D1	D2	S	L	a	a1	h
KA-L06	6	G1/8 M10×1	Φ13	Φ28	24	64	10	6	$1.4^{0}_{-0.1}$
KA-L08	8	G1/4 M12×1.5	Φ16	Φ28	24	64	12	6	$1.4^{0}_{-0.1}$
KA-L10	10	G3/8 M16×1.5	Φ20	Φ40	36	86	14	10	$1.8^{0}_{-0.1}$
KA-L15	15	G1/2 M20×1.5	Φ26	Φ40	36	86	14	10	$1.8^{0}_{-0.1}$
KA-L20	20	G3/4 M27×2	Φ32	Φ55	46	112	21	12	$1.8^{0}_{-0.1}$
KA-L25	25	G1 M33×2	Φ40	Φ55	46	112	23	12	$2.7^{0}_{-0.12}$
KA-L32	32	G1-1/4 M42×2	Φ48	Φ88	75	161	25	22	$2.7^{0}_{-0.12}$
KA-L40	40	G1-1/2 M48×2	Φ54	Φ88	75	161	26	26	$2.7^{0}_{-0.12}$
KA-L50	50	G2 M60×2	Φ70	Φ100	90	95	26	26	$4.5^{0}_{-0.18}$

XQ Series Quick Exhaust Valve

Ordering Code

XQ — 170800

Series Code
XQ:Quick Exhaust Valve

Port Size
170600:G1/8"
170800:G1/4"
171000:G3/8"
171500:G1/2"
172000:G3/4"

Graphic Symbol

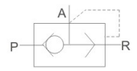



The valve is generally installed on the pipeline between the cylinder and reversal valve and near the cylinder, which directly discharge the air from cylinder without passing the reversal valve and thusto achieve the goal of fast reversion of cylinder.The effect on improving cylinder speed is especially obvious.
P: Connect reversal valve export
A: Connect cylinder
R: Connect muffler

Specifcation

Model	XQ170600	XQ170800	XQ171000	XQ171500
Joint Threaded	G1/8"	G1/4"	G3/8"	G1/2"
Port Size	6mm	6mm	8mm	15mm
Flow	≥0.9m^3/min	≥0.9m^3/min	≥2.5m^3/min	≥4.5m^3/min
Timerate(Ten Thousand Times)	≤200			
Working Pressure Range	0.12~1.0MPa			
Exchange Times(S)	≤0.03	≤0.03	≤0.04	≤0.05

Overall Dimensions

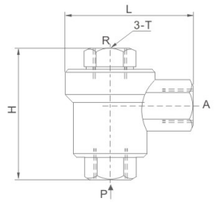

Dimension Sheet

Model	T	H	L
XQ170600	G1/8"	39	32
XQ170800	G1/4"	51	45
XQ171000	G3/8"	68	62
XQ171500	G1/2"	77	86

ST Series Shuttle Valve

Ordering Code

ST — 01

Series Code
ST:Shuttle Valve

Port Size
01:G1/8"
02:G1/4"
03:G3/8"
04:G1/2"
06:G3/4"
08:G1"

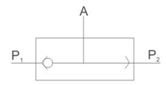

Graphic Symbol



Specifcation

Model	ST-01	ST-02	ST-03	ST-04	ST-06	ST-08
Working Medium	Air					
Effective Section Area	7.5mm^2	21mm^2	40mm^2	60mm^2	110mm^2	190mm^2
Port Size	G1/8"	G1/4"	G3/8"	G1/2"	G3/4"	G1"
Working Pressure Range	0~1.0MPa					
Operating Temperature Range	-5~60℃					

Overall Dimensions

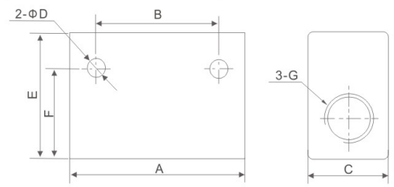

Dimension Sheet

Model	A	B	C	D	E	F	G
ST-01	40	24	16	4.5	25	20.5	G1/8"
ST-02	50	35	22	5.5	35	25	G1/4"
ST-03	75	48	30	7	50	42	G3/8"
ST-04	75	48	30	7	50	42	G1/2"
ST-06	110	72	40	7	70	58	G3/4"
ST-08	110	72	40	7	70	58	G1"

Valves & MANIFOLDS 方向控制元件

QE Series Quick Exhaust Valve

Ordering Code

QE — 01

Series Code
QE:Quick Exhaust Valve

Port Size
01:G1/8" 02:G1/4"
03:G3/8" 04:G1/2"
06:G3/4"

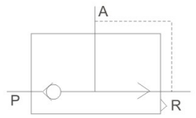

Graphic Symbol



Specifcation

Model	QE-01	QE-02	QE-03	QE-04	QE-06
Port Size	G1/8"	G1/4"	G3/8"	G1/2"	G3/4"
Effective Section Area	16mm²	27.5mm²	38mm²	71mm²	72.5mm²
Working Medium	Air				
Working Pressure Range	0~1.0MPa				
Operating Temperature Range	0~60℃				

Overall Dimensions

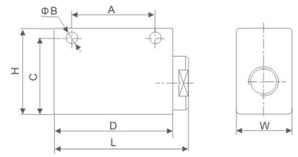

Dimension Sheet

Model	Bore	L	W	H	A	B	C	D
QE-01	G1/8″	46	20	32	30	4.3	27	40
QE-02	G1/4″	62	25	40	39	5.6	33.5	55
QE-03	G3/8″	62	25	40	39	5.6	33.5	55
QE-04	G1/2″	98	38	64	60	8.5	51	90
QE-06	G3/4″	98	38	64	60	8.5	51	90

HSV Series Hand Sliding Valve

Ordering Code

HSV — 03

Series Code
HSV:Hand Sliding Valve

Port Size
01:G1/8"
02:G1/4"
03:G3/8"
04:G1/2"
06:G3/4"

Graphic Symbol

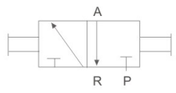



This valve is a two-position three-way hand sliding valve,which is usually installed in the piping to turn on/off airs. When it is turned off,the air pressure in the pneumatic system is exhausted simultaneously.

Specifcation

Model	HSV-01	HSV-02	HSV-03	HSV-04	HSV-06
Port Size	G1/8"	G1/4"	G3/8"	G1/2"	G3/4"
Flow Bore	4mm	7mm	10mm	12mm	18mm
Working Medium	Filtered Air				
Working-pressure	0~1.0MPa				
Ambient Temperature Range	5~60℃				
Working Force	20N				30N

Overall Dimensions

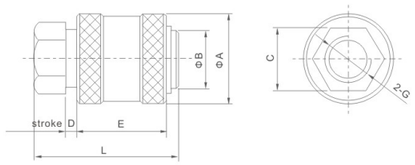

Dimension Sheet

Model	A	B	C	D	E	L	G
HSV-01	20	13	14	3	20	32	G1/8
HSV-02	27	18	19	5	32	48	G1/4
HSV-03	30	21	22	5	32	48	G3/8
HSV-04	38	24	27	10	40	70	G1/2
HSV-06	45	32	34	10	45	75	G3/4



SY5120



SY5220


MFH-1/4


XCZ-110-10-A
Small Valve Group




Q22XD-2L
Q23XD-2L


3VKZF-15/10~25/20
3AKZF-15/10~25/20


F17 Petrol
Solenoid Valve

Solenoid Valve Accessories


XC601 3/2 XC602 2/2
(Armature)


XC603 3/2 XC604 2/2
(Armature)


Coil-110


Coil-210



DIN 43650C
(Connectors)



DIN 43650B
(Connectors)


DIN 43650A
(Connectors)


2V,2P Series Coil


2W(UD) Series
Coil UD-08


2W(UD) Coil UD-15


2W(UW) Series Coil


2W(2L,US) Large
Aperture Coil US-H


2W(2L,US) Large Aperture
Plastic Capsulation Coil


AB410A


PU Series Coil


VX Series Coil


PU220 Series Diaphragm


PU225 Series Diaphragm


2W Series Diaphragm


2L(US) Series Piston

Explosion-proof Coil & Timer


Product No.XC280
Product Type0980,0981


Product No.XC281
Product Type1380,1381


Valve Timer-1

DNC Series ISO6431 Standard Cylinder
ACTUATORS 执行元件

Ordering Code

□ DNC 50 × 100 — 25 — S — □

Tube Type
Blank:Square Type
T:Tie-rod Type
M:Mickey Mouse Type

Series Code
DNC:ISO6431 Standard Double Action Type
DNCD:ISO6431 Standard Two Axis Double Action Type
DNCJ:ISO6431 Two Axis Stroke Adjust Type

Cylinder Bore
32mm-125mm

Stroke

Adjust Storke
25:25mm
50:50mm
75:75mm

Magnet Code
Blank:Without Magnet
S:With Magnet

Fixed Type
Blank:Normal type
LB:Front and back fixed type
FA:Front cover fixed type(Front flange type)
FB:Back cover fixed type(Back flange type)
CA:Back cover fixed type (Single earring)
CB:Back cover fixed type(Double earring)
SDB:Back cover fixed type


DNC 50 × 100


MDNC 50 × 100


TDNC 50 × 100

Normal Type
DNC–S

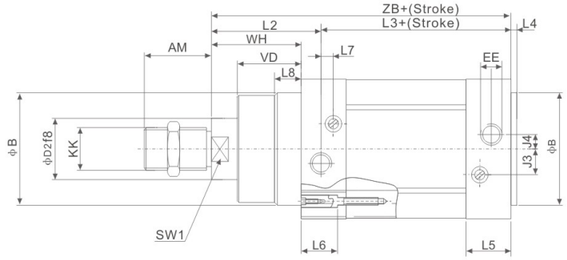

Bore	AM	B	D2	D5	D7	E	EE(G)	J3	J4	KK	L2	L3	L4	L5	L6	L7	L8	SW1	SW2	VD	WH	ZB
32	22	30	12	32.5	M6	45	1/8	6	5.2	M10×1.25	40	80	4	26	22	3.3	8	10	6	16	26	120
40	24	35	16	38	M6	54	1/4	8	6	M12×1.25	46	89	4	29.6	22	3.6	10	13	6	20	30	135
50	32	40	20	46.5	M8	64	1/4	10	8.5	M16×1.5	54	90	4	30	22	5.1	10	17	8	27	37	144
63	32	45	20	56.5	M8	75	3/8	12.4	10	M16×1.5	57	101	4	35.5	22	6.6	10	17	8	27	37	158
80	40	45	25	72	M10	93	3/8	12.5	8	M20×1.5	65	109	4	36	25	10.5	10	22	10	34.5	46	174
100	40	55	25	89	M10	110	1/2	11.8	10	M20×1.5	71	118	4	39	25	8	12.5	22	10	38	51	189
125	54	60	32	110	M12	134	1/2	13	8	M27×2	95	128	6	44.7	30	14	12.5	28	12	46	65	223

Internal structure

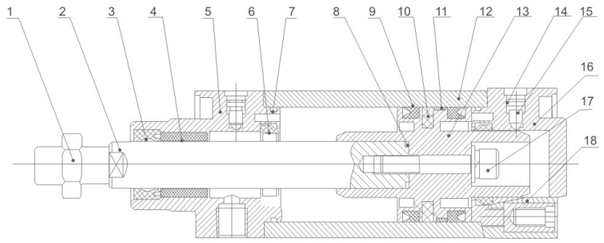

NO	Designation	NO	Designation
1	Piston Rod Nut	2	Piston Rod
3	Front Cover Seal Ring	4	Bearing
5	Front Cover	6	Buffering O-Ring
7	O-Ring	8	Pistion rod O-Ring
9	Piston O-Ring	10	Magnet(Optional)
11	Wear Ring	12	Barrel
13	Piston	14	Cushion Seal
15	Cushion Needle	16	Back Cover
17	Hex Socket Screw	18	Profile Bolt

Double Piston Rod Type
DNC–D–S

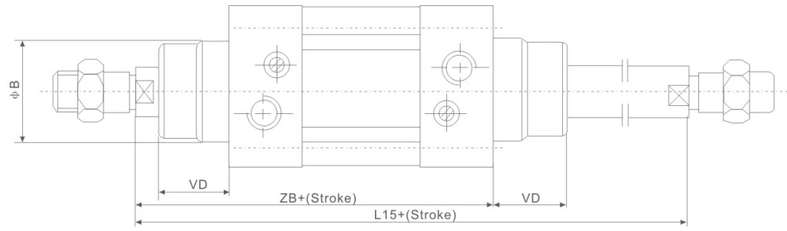

Bore	32	40	50	63	80	100	125
B	30	35	40	45	45	55	60
L15	146	165	182	194	220	240	298
VD	16	20	27	27	34.7	38.2	46
ZB	120	135	144	158	174	189	223

Specifcation

Bore(mm)	32	40	50	63	80	100	125
Motion Pattern	Double Action						
Working Medium	Filtered Air						
Compression Pressure	1.5MPa						
Max.Operating Pressure	1.0MPa						
Min.Operating Pressure	0.1MPa						
Buffer	Air Buffer(Standard)						
ConditionTemperature	-5~70℃						
Operating Speed	50~800mm/s						
Port Size	G1/8"	G1/4"		G3/8"		G1/2"	

Stroke

Bore	Standard Stroke	Buffer Stroke	Stroke Range
32	25 40 50 80 100 125 160 200 250 320 400 500	20	10~2000
40			
50		22	
63			
80		32	
100			
125		35	

Ordering Code

SI — 50 × 50 — 25 — S — □

Series Code
SI:ISO6431 Standard Double Action Type
SID:ISO6431 Standard Two Axis Double Action Type
SIJ:ISO6431 Two Axis Stroke Adjust Type

Cylinder Bore
32mm-200mm

Stroke

Adjust Storke
25:25mm
50:50mm
75:75mm

Magnet Code
Blank:Without Magnet
S:With Magnet

Fixed Type
Blank:Normal type
LB:Front and back fixed type
FA:Front cover fixed type(Front Flange Type)
FB:Back cover fixed type(Back Flange Type)
CA:Back cover fixed type (Single Earring)
CB:Back cover fixed type(Double Earring)
TC:Central trunnion type
TC-M:Central trunnion type attaching foot seat

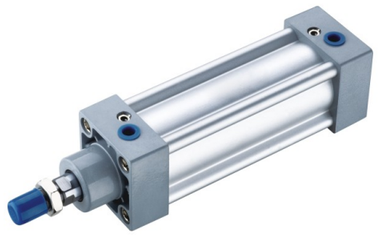

SI 50 × 100

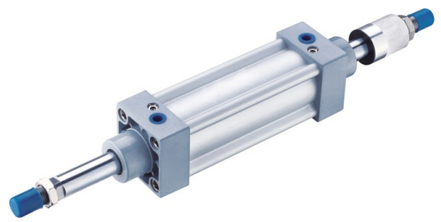

SIJ 50 × 100–25

Internal structure

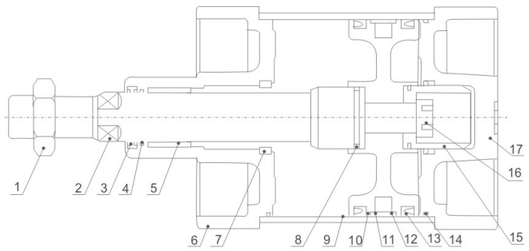

NO	Designation	NO	Designation
1	Piston Rod Nut	10	Piston
2	Piston rod	11	Wearing
3	Front cover seal ring	12	Magnet(Optional)
4	O-Ring	13	Pistion O-Ring
5	Bearing	14	Pipe wall O-Ring
6	Front cover	15	Damping
7	Buffering O-Ring	16	Hex socket screw
8	Piston rod O-Ring	17	Back cover
9	Barrel		

Specifcation

Bore(mm)	32	40	50	63	80	100	125	160	200
Motion Pattern	Double Action								
Working Medium	Air								
Fixed Type	Normal type FA type FB type CA type CB type LB type TC type								
Working Pressure Range	0.1~0.9MPa								
Ensured Pressure Resistance	1.35MPa								
Operating Temperature Range	-5~70℃								
Operating Speed Range	50~800mm/s								
Buffer Type	Adjustable Buffer								
Buffer Stroke	24						32		
Port Size	G1/8"	G1/4"		G3/8"		G1/2"		G3/4"	

Cylinder theory output

Cylinder inside Diameter	External Diameter of Piston Rod	Motion Patterm		Compression Area(cm^2)	Air Pressure(kgf/cm^2)								
					1	2	3	4	5	6	7	8	9
32	12	Double Action	Press Side	8.04	8.04	16.08	24.12	32.16	40.20	48.24	56.28	64.32	72.36
			Pull Side	6.90	6.90	13.80	20.07	27.60	34.50	41.40	48.30	55.20	62.10
40	16	Double Action	Press Side	12.56	12.56	25.12	37.68	50.24	62.80	75.36	87.92	100.24	113.04
			Pull Side	10.55	10.55	21.10	31.65	42.20	52.75	63.30	73.85	84.40	94.95
50	20	Double Action	Press Side	19.63	19.63	39.26	58.89	78.52	98.15	117.78	137.41	157.04	176.67
			Pull Side	16.49	16.49	32.98	49.47	65.96	82.45	98.94	115.43	139.92	148.41
63	20	Double Action	Press Side	31.17	31.17	62.34	93.51	124.68	155.85	187.02	218.19	249.36	280.53
			Pull Side	28.03	28.03	56.06	84.09	112.12	140.15	168.18	196.21	224.24	252.27
80	25	Double Action	Press Side	50.26	50.26	100.52	150.78	201.04	251.30	301.56	351.82	402.08	452.34
			Pull Side	45.36	45.36	90.72	136.08	181.44	226.80	272.16	317.52	326.88	408.24
100	25	Double Action	Press Side	78.53	78.53	157.06	235.59	314.12	392.65	471.18	428.82	628.24	706.77
			Pull Side	71.47	71.47	142.94	214.41	285.88	357.35	428.82	500.29	517.76	643.23
125	32	Double Action	Press Side	122.72	122.72	245.44	368.16	490.88	613.60	736.32	859.04	981.76	1104.48
			Pull Side	114.68	114.68	229.36	344.04	458.72	573.40	688.08	802.76	917.44	1032.12
160	40	Double Action	Press Side	201.06	201.06	402.12	603.18	804.24	1005.30	1206.36	1407.42	1608.48	1809.54
			Pull Side	188.49	188.49	376.98	565.47	753.96	942.45	1130.94	1319.43	1507.92	1696.41
200	40	Double Action	Press Side	314.16	314.16	628.32	942.48	1256.64	1570.80	1884.96	2199.12	2513.28	2827.44
			Pull Side	301.57	301.57	603.14	904.71	1206.28	1507.80	1809.42	2100.99	2412.56	2714.13

Stroke

Bore(mm)	Standard Stroke	Max.Stroke	Permissible Stroke
32	25 50 75 80 100 125 160 175 200 250 300 350 400 450 500	1000	2000
40	25 50 75 80 100 125 160 175 200 250 300 350 400 450 500 600 700 800	1200	2000
50	25 50 75 80 100 125 160 175 200 250 300 350 400 450 500 600 700 800 900 1000	1200	2000
63	25 50 75 80 100 125 160 175 200 250 300 350 400 450 500 600 700 800 900 1000	1500	2000
80	25 50 75 80 100 125 160 175 200 250 300 350 400 450 500 600 700 800 900 1000	1500	2000
100	25 50 75 80 100 125 160 175 200 250 300 350 400 450 500 600 700 800 900 1000	1500	2000
125	25 50 75 80 100 125 160 175 200 250 300 350 400 450 500 600 700 800 900 1000	1500	2000
160	25 50 75 80 100 125 160 175 200 250 300 350 400 450 500 600 700 800 900 1000	1500	2000
200	25 50 75 80 100 125 160 175 200 250 300 350 400 450 500 600 700 800 900 1000	1500	2000

■ If you need special stroke,please Tell us, we can make according your require.

Overall Dimensions

SI

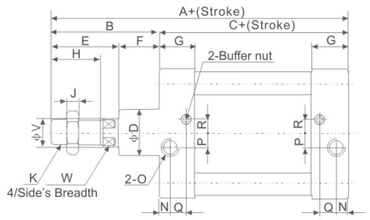

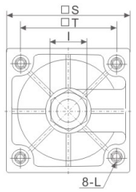

SID

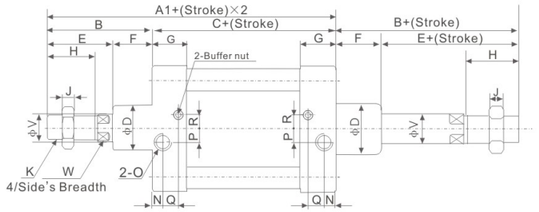

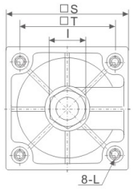

SIJ

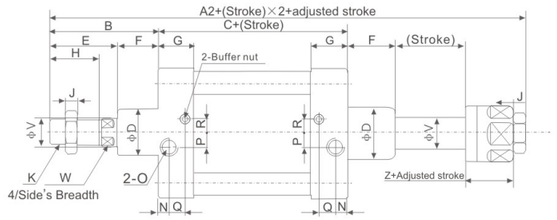

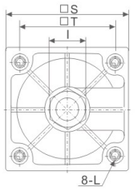

Dimension Sheet

Bore/Symbol	A	A1	A2	B	C	D	E	F	G	H	I	J	K	L
32	142	190	185	48	94	30	32	16	27.5	22	17	6	M10×1.25	M6
40	159	213	205	54	105	35	36	18	29	24	19	7	M12×1.25	M6
50	175	244	231	70	105	40	45	25	30	32	24	8	M16×1.5	M8
63	190	259	245	70	120	45	46	24	31	32	24	8	M16×1.5	M8
80	214	300	283	86	128	45	56	30	35	40	30	10	M20×1.5	M10
100	227	316	298	89	138	55	57	32	36	40	30	10	M20×1.5	M10
125	278	396	368	118	160	60	73	45	46	54	41	10	M27×2	M12
160	332	484	448	152	180	65	94	58	50	72	55	18	M36×2	M16
200	337	494	452	157	180	75	100	51	51	72	55	18	M36×2	M16

Bore/Symbol	N	O	P	Q	R	S	T	V	W	Z
32	13.5	G1/8"	4	7.5	7	47	32.5	12	10	21
40	16	G1/4"	6	8.5	9	53	38	16	13	21
50	15.5	G1/4"	8.5	7.5	7.5	65	46.5	20	17	23
63	16.5	G3/8"	7.5	8.5	9	75	56.5	20	17	23
80	16.5	G3/8"	11	8.5	13.5	95	72	25	22	29
100	18.5	G1/2"	13.5	9.5	14.5	115	89	25	22	29
125	23	G1/2"	14	12	14	140	110	32	28	35
160	25	G3/4"	15	12	20	180	140	40	36	40
200	25	G3/4"	15	12	20	220	175	40	36	40

Ordering Code

SC 50 × 50 — 25 — S — □

Series Code
SC:Standard double Action(Tie-rod Type)
SCD:Double-shaft Double Action (Tie-rod Type)
SCJ:Double Axis Double Acting Adjustable Type(Tie-rod Type)
SU:Standard Double Acting (Micky Mouse Type)

Cylinder Bore
32mm-200mm

Stroke

Adjust Storke
25:25mm
50:50mm
75:75mm

Magnet Code
Blank:Without Magnet
S:With Magnet

Fixed Type
Blank:Normal type
LB:Front and fack fixed type
FA:Front cover Fixed type(Front flange type)
FB:Back cover Fixed type(Back flange type)
CA:Back cover Fixed type (Single earring)
CB:Back cover Fixed type(Double earring)
TC:Central trunnion Type
TC-M:Central trunnion type attaching foot seat



SC 50×100



SU 50×100



SCJ 50×100–25

Internal structure

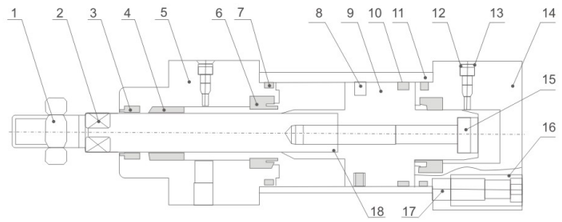

NO	Designation	NO	Designation
1	Piston Rod Nut	10	Wear Ring
2	Piston rod	11	Barrel
3	Front cover seal ring	12	Buffering Barrel o-ring
4	Bearing	13	Damping adjustable screw
5	Front cover	14	Back cover
6	Buffering o-ring	15	Hex socket screw
7	Pipe wall o-ring	16	Tie Rod Nut
8	Piston o-ring	17	Tie rod
9	Piston	18	Piston rod o-ring

Specifcation

Bore(mm)	32	40	50	63	80	100	125	160	200
Motion Pattern	Double Action								
Working Medium	Air								
Fixed Type	Basic type FA type FB type CA type CB type LB type TC type TC-M type								
Operating Pressure Range	0.1~0.9kgf/cm²								
Ensured Pressure Resistance	1.35Mpa								
Operating Temperature Range	-5~70℃								
Operating Speed Range	300~800mm/s								
Buffer Type	Adjustable Buffer								
Buffer Stroke		24					32		
Port Size	G1/8"	G1/4"		G3/8"		G1/2"		G3/4"	

■ SCD,SCJ Fixed Type:FA,FB,LB,TC & TC-M Type.

Cylinder theory output

Cylinder inside Diameter	External Diameter of Piston Rod	Motion Patterm		Compression Area(cm^2)	Air Pressure(kgf/cm^2)								
					1	2	3	4	5	6	7	8	9
32	12	Double Action	Press Side	8.04	8.04	16.08	24.12	32.16	40.20	48.24	56.28	64.32	72.36
			Pull Side	6.90	6.90	13.80	20.07	27.60	34.50	41.40	48.30	55.20	62.10
40	16	Double Action	Press Side	12.56	12.56	25.12	37.68	50.24	62.80	75.36	87.92	100.24	113.04
			Pull Side	10.55	10.55	21.10	31.65	42.20	52.75	63.30	73.85	84.40	94.95
50	20	Double Action	Press Side	19.63	19.63	39.26	58.89	78.52	98.15	117.78	137.41	157.04	176.67
			Pull Side	16.49	16.49	32.98	49.47	65.96	82.45	98.94	115.43	139.92	148.41
63	20	Double Action	Press Side	31.17	31.17	62.34	93.51	124.68	155.85	187.02	218.19	249.36	280.53
			Pull Side	28.03	28.03	56.06	84.09	112.12	140.15	168.18	196.21	224.24	252.27
80	25	Double Action	Press Side	50.26	50.26	100.52	150.78	201.04	251.30	301.56	351.82	402.08	452.34
			Pull Side	45.36	45.36	90.72	136.08	181.44	226.80	272.16	317.52	326.88	408.24
100	25	Double Action	Press Side	78.53	78.53	157.06	235.59	314.12	392.65	471.18	428.82	628.24	706.77
			Pull Side	71.47	71.47	142.94	214.41	285.88	357.35	428.82	500.29	517.76	643.23
125	32	Double Action	Press Side	122.72	122.72	245.44	368.16	490.88	613.60	736.32	859.04	981.76	1104.48
			Pull Side	114.68	114.68	229.36	344.04	458.72	573.40	688.08	802.76	917.44	1032.12
160	40	Double Action	Press Side	201.06	201.06	402.12	603.18	804.24	1005.30	1206.36	1407.42	1608.48	1809.54
			Pull Side	188.49	188.49	376.98	565.47	753.96	942.45	1130.94	1319.43	1507.92	1696.41
200	40	Double Action	Press Side	314.16	314.16	628.32	942.48	1256.64	1570.80	1884.96	2199.12	2513.28	2827.44
			Pull Side	301.57	301.57	603.14	904.71	1206.28	1507.80	1809.42	2100.99	2412.56	2714.13

Stroke

Bore(mm)	Standard Stroke	Max.Stroke	Permissible Stroke
32	25 50 75 80 100 125 160 175 200 250 300 350 400 450 500	1000	2000
40	25 50 75 80 100 125 160 175 200 250 300 350 400 450 500 600 700 800	1200	2000
50	25 50 75 80 100 125 160 175 200 250 300 350 400 450 500 600 700 800 900 1000	1200	2000
63	25 50 75 80 100 125 160 175 200 250 300 350 400 450 500 600 700 800 900 1000	1500	2000
80	25 50 75 80 100 125 160 175 200 250 300 350 400 450 500 600 700 800 900 1000	1500	2000
100	25 50 75 80 100 125 160 175 200 250 300 350 400 450 500 600 700 800 900 1000	1500	2000
125	25 50 75 80 100 125 160 175 200 250 300 350 400 450 500 600 700 800 900 1000	1500	2000
160	25 50 75 80 100 125 160 175 200 250 300 350 400 450 500 600 700 800 900 1000	1500	2000

SCT Series Muti-Position/Booster Cylinder



SCT 100 × 60 × 100

Specifcation

Working Medium	Air
Operating Temperature Range	0.1~0.9kgf/cm^2
Ensured Pressure Resistance	1.35Mpa
Operating Temperature Range	-5~70℃

Product instruction

Booster cylinder combine 2 or more standard cylinder with the same bore and stroke, Create twice or multiple force as standard cylinder. The connection of 2 or more cylinders are linked with the same material Compact structure and easy for installation.

Overall Dimensions

SC

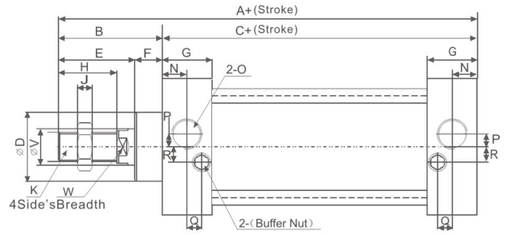

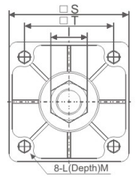

SCD

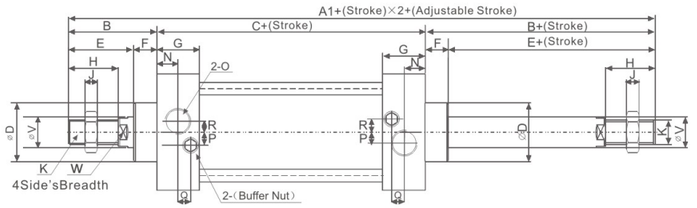

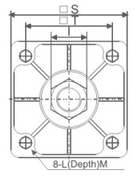

SCJ

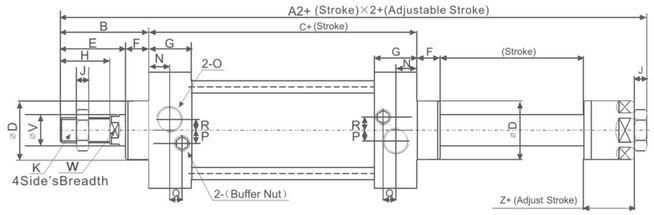

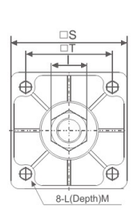

Dimension Sheet

Bore/Symbol	A	A1	A2	B	C	D	E	F	G	H	I	J	K
32	140	187	182	47	93	28	32	15	27.5	22	17	6	M10×1.25
40	142	191	185	49	93	32	34	15	27.5	24	17	7	M12×1.25
50	150	207	196	57	93	36	42	15	27.5	32	23	8	M16×1.5
63	153	210	199	57	96	36	42	15	27.5	32	23	8	M16×1.5
80	182	257	242	75	107	47	54	21	33	40	26	10	M20×1.5
100	188	263	248	75	108	47	54	21	33	40	26	10	M20×1.5
125	203	291	265.5	88	115	52	68	20	38	54	41	9	M27×2
160	239	352	332	113	126	62	88	25	38	72	55	16	M36×2
200	244	362	342	118	126	62	88	30	38	72	55	16	M36×2

Bore/Symbol	L	M	N	O	P	Q	R	S	T	V	W	Z
32	M6×1	9.5	13.7	G1/8"	3.5	7.5	7	45	33	12	10	21
40	M6×1	9.5	13.5	G1/4"	6	8.2	9	50	37	16	14	21
50	M6×1	9.5	13.5	G1/4"	8.5	8.2	9	62	47	20	17	23
63	M8×1.25	9.5	13.5	G3/8"	7	8.2	8.5	75	56	20	17	23
80	M10×1.5	11.5	16.5	G3/8"	10	9.5	14	94	70	25	22	29
100	M10×1.5	11.5	16.5	G1/2"	11	9.5	14	112	84	25	22	29
125	M12×1.75	16	20	G1/2"	14	6.5	14	136	104	32	27	42.5
160	M16×2	15	20	G3/4"	15	5	15	174	134	40	36	68
200	M16×2	15	20	G3/4"	15	3	15	214	163	40	36	68

Ordering Code

MA	□	20	×	50	—	25	S	—	□

Type
MA:Double Action Type
MSA:Single Extrusion Type
MTA:Single Drawing-in Type
MAD:Double-shaft Double Action Type
MACD:Double-shaft Double Action Damping Type
MAJ:Double-shaft and Adjustable Stroke Type
MAC:With Cushion Type

Back Cover Type
Blank:Fishtail type
CM:Rounded type
U:Horizontal type

Cylinder Bore
16mm~40mm

Stroke

Adjustable Stroke Type
0~100mm

Magnet Code
Blank:Without Magnet
S:With Magnet

Fixed Type
Blank:Normal type
LB:Front and back fixed type
FA:Front cover fixed type
SDB:Back cover swinging type
U:Back cover fixed type



MA 25 × 50



MAJ 25 × 50–25

Internal structure

NO	Designation	NO	Designation
1	Piston Rod Nut	2	Piston Rod
3	Front Cover Seal Ring	4	Oiled Bearing
5	Front Cover Nut	6	Front Cover
7	Stainless steel tube	8	Anti-crash cushion
9	Piston	10	Piston O-Ring
11	Magnet(Optional)	12	Wear ring
13	Back cushion	14	Hex socket screw
15	Back Cover		

Specifcation

Bore(mm)		16	20	25	32	40
Motion pattern		Double Action or Single Action				
Working Medium		Air				
Fixed Type		Normal Type	LB Type	FA Type	SDB Type	U Type
Operating Pressure Range		0.1~0.9MPa				
Ensured Pressure Resistance		1.35MPa				
Operating Temperature Range		-5~70℃				
Operating Speed Range		50~800mm/s				
Buffer Type	Standard Type	Anti-crash cushion				
	Damping Type	-	Adjustable cushion			
Port Size		M5×0.8	G1/8"	G1/8"	G1/8"	G1/8"

■ Our Company can also make flat for cylinder covers inlet and outlet position. If you require this, it should be specified.

Stroke

Bore(mm)	Standard Stroke	Max.Stroke	Permissible Stroke
16	25 50 75 80 100 125 160 175 200	300	500
20	25 50 75 80 100 125 160 175 200 250 300	500	650
25	25 50 75 80 100 125 160 175 200 250 300 350 400 450 500	500	650
32	25 50 75 80 100 125 160 175 200 250 300 350 400 450 500	500	650
40	25 50 75 80 100 125 160 175 200 250 300 350 400 450 500	500	650

Overall Dimensions

MA

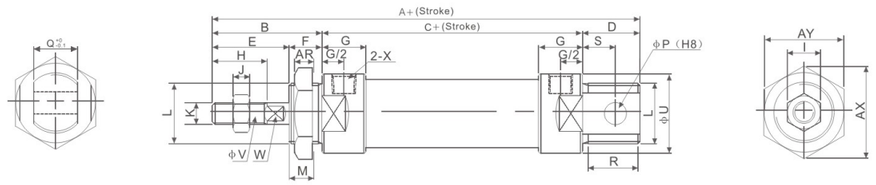

MA-CM

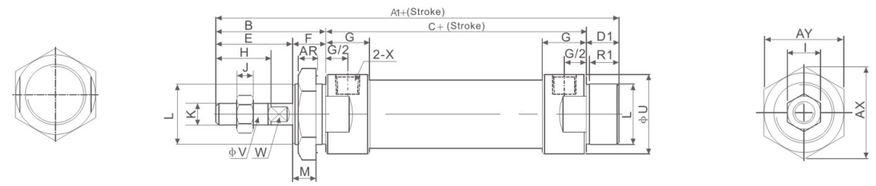

MA-U

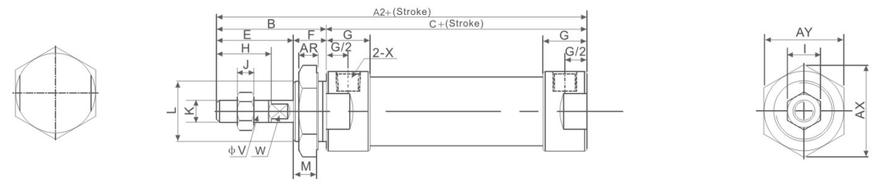

Dimension Sheet

Bore/Symbol	A	A1	A2	B	C	D	D1	E	F	G	H	I	J	K
16	114	114	98	38	60	16	16	22	16	10	16	10	5	M6×1
20	137	128	116	40	76	21	12	28	12	16	20	12	6	M8×1.25
25	141	134	120	44	76	21	14	30	14	16	22	17	6	M10×1.25
32	147	134	120	44	76	27	14	30	14	16	22	17	6	M10×1.25
40	149	136	122	46	76	27	14	32	14	16.7	24	17	7	M12×1.25

Bore/Symbol	L	M	P	Q	R	R1	S	U	V	W	X	AR	AX	AY
16	M16×1.5	14	6	12	14	14	9	21	6	5	M5	6	24	27.5
20	M22×1.5	10	8	16	19	10	12	27	8	6	G1/8"	7	33	29
25	M22×1.5	12	8	16	19	12	12	30	10	8	G1/8"	7	33	29
32	M24×2.0	12	10	16	25	12	15	35	12	10	G1/8"	8	37	32
40	M30×2.0	12	12	20	25	12	15	41.6	16	14	G1/8"	9	47	41

MAL6432 Series Aluminum alloy mini cylinder(ISO 6432)



MAL6432 20 × 75

Specifcation

Motion Pattern	Double Action or Single Action
Operating Pressure Range	0.1~0.9MPa
Ensured Pressure Resistance	1.35MPa
Operating Temperature Range	-5~70℃
Operating Speed Range	30~800mm/s

Product instruction

Our company can also provide MAL series ISO6432 standard aluminum alloy mini cylinder,if you need this,pls change ordering code MAL into MAL6432.

MA Series Stainless Steel Mini Cylinder

Overall Dimensions

MSA

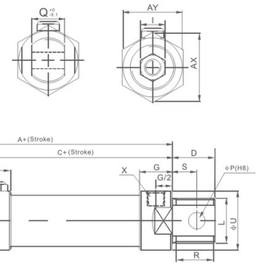

MSA-CM

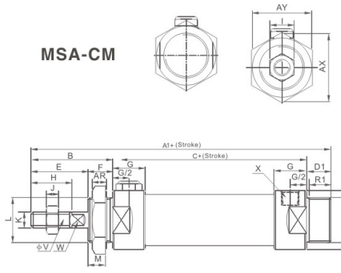

MSA-U

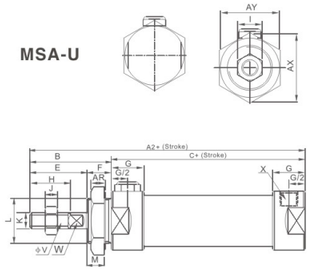

Dimension Sheet

Symbol	A		A1		A2		B	C		D	D1	E	F	G	H	I	J
Bore/Stroke	0-50	51-100	0-50	51-100	0-50	51-100		0-50	51-100								
16	114	139	128	153	98	123	38	60	85	16	16	22	16	10	16	10	5
20	137	162	134	159	116	141	40	76	101	21	12	28	12	16	20	12	6
25	141	166	134	159	120	145	44	76	101	21	14	30	14	16	22	17	6
32	147	172	136	161	120	145	44	76	101	27	14	30	14	16	22	17	6
40	149	174	122	144	122	147	46	76	101	27	14	32	14	16.7	24	17	7

Inside Diameter/Symbol	K	L	M	P	Q	R	R1	S	U	V	W	X	AR	AX	AY
16	M6×1	M16×1.5	14	6	12	14	14	9	21	6	5	M5	6	25	22
20	M8×1.25	M22×1.5	10	8	16	19	10	12	27	8	6	G1/8"	7	33	29
25	M10×1.25	M22×1.5	12	8	16	19	12	12	30	10	8	G1/8"	7	33	29
32	M10×1.25	M24×2.0	12	10	16	25	12	15	35	12	10	G1/8"	8	37	32
40	M12×1.25	M30×2.0	12	12	20	25	12	15	41.6	16	14	G1/8"	9	47	41

Overall Dimensions

MAD

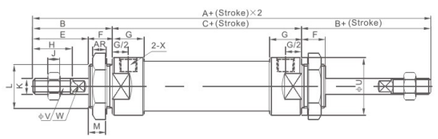

MAJ

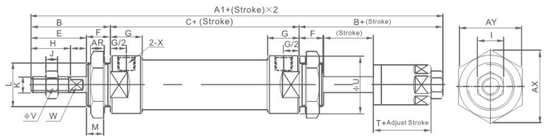

Dimension Sheet

Inside Diameter/Symbol	A	A1	B	C	E	F	G	H	I	J	K
16	136	135	38	60	22	16	10	16	10	5	M6×1
20	156	153	40	76	28	12	16	20	12	6	M8×1.25
25	164	161	44	76	30	14	16	22	17	6	M10×1.25
32	164	161	44	76	30	14	16	22	17	6	M10×1.25
40	168	164	46	76	32	14	16.7	24	17	7	M12×1.25

Inside Diameter/Symbol	L	M	U	V	W	X	AR	AX	AY	T
16	M16×1.5	14	21	6	5	M5	6	25	22	16
20	M22×1.5	10	29	9	6	G1/8"	7	33	29	19
25	M22×1.5	12	34	10	8	G1/8"	7	33	29	21
32	M24×1.5	12	39.5	12	10	G1/8"	8	37	32	21
40	M30×2.0	12	41.6	16	12	G1/8"	9	47	41	21

MAL Series Aluminum alloy Mini Cylinder

Ordering Code

MAL □ 20 × 50 — 25 — S — □

Serise Code
MAL: Double Action type
MSAL: Single Extrusion Type
MTAL:Single Drwing-in Type
MALD: Double-shaft Double Action Type
MALCD: Double-shaft Action Damping Type
MALJ:Double-shaft And Adjustable Stroke Type
MALC:With Cushion Type

Back Cover Type
Blank:Fishtail type
CM:Rounded type
U:Horizontal type

Cylinder Bore
16mm~40mm

Stroke

Adjustable Stroke Type
0~100mm

Magnet Code
Blank:Without Magnet
S:With Magnet

Fixed Type
Blank:Normal type
LB:Front and back fixed type
FA:Front cover fixed type
SDB:Back cover swinging type



MAL 25×50



MALJ 25×50–25

Internal structure

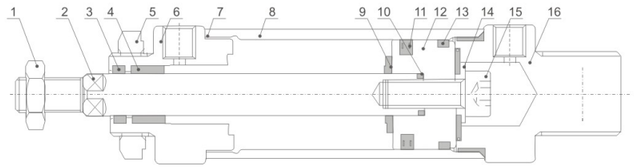

NO	Designation	NO	Designation
1	Piston Rod Nut	2	Piston Rod
3	Front Cover Seal Ring	4	Oiled Bearing
5	Front Cover Nut	6	Front Cover
7	Pipe wall O-ring	8	Aluminum tube
9	Anti-crash cushion	10	Piston rod O-Ring
11	Piston O-Ring	12	Piston
13	Wear ring	14	Back cushion
15	Hex socket screw	16	Back Cover

Specifcation

Bore(mm)		16	20	25	32	40
Motion pattern		Double Action or Single Action				
Working Medium		Air				
Fixed Type		Normal Type LB Type FA Type SDB Type				
Operating Pressure Range		0.1~0.9MPa				
Ensured Pressure Resistance		1.35MPa				
Operating Temperature Range		-5~70℃				
Operating Speed Range		30~800mm/s				
Buffer Type	Standard Type	Anti-crash cushion				
	Damping Type	-	Adjustable cushion			
Port Size		M5×0.8	G1/8"	G1/8"	G1/8"	G1/4"

■ Our Company can also make flat for cylinder covers inlet and outlet position. If you require this, it should be specified.

Stroke

Bore(mm)	Standard Stroke	Max.Stroke	Permissible Stroke
16	25 50 75 80 100 125 160 175 200	300	500
20	25 50 75 80 100 125 160 175 200 250 300	500	650
25	25 50 75 80 100 125 160 175 200 250 300 350 400 450 500	500	650
32	25 50 75 80 100 125 160 175 200 250 300 350 400 450 500	500	650
40	25 50 75 80 100 125 160 175 200 250 300 350 400 450 500	500	650

Overall Dimensions

MAL

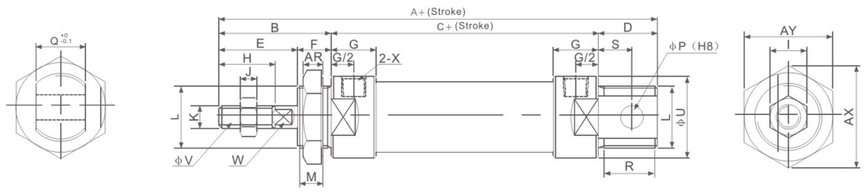

MAL-CM

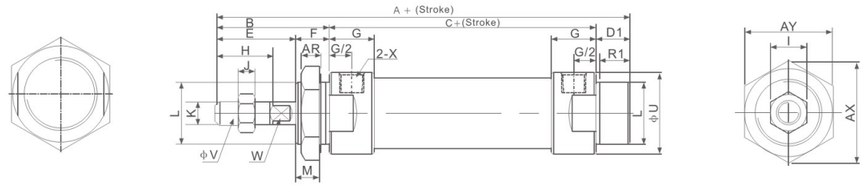

MAL-U

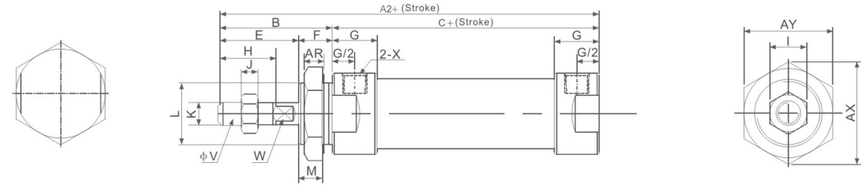

Dimension Sheet

Bore/Symbol	A	A1	A2	B	C	D	D1	E	F	G	H	I	J	K
16	110	114	98	38	56	16	16	22	16	10	16	10	5	M6×1
20	131	122	110	40	70	21	12	28	12	16	20	12	6	M8×1.25
25	135	128	114	44	70	21	14	30	14	16	22	17	6	M10×1.25
32	141	128	114	44	70	27	14	30	14	16	22	17	6	M10×1.25
40	165	152	138	46	92	27	14	32	14	22	24	17	7	M12×1.25

Bore/Symbol	L	M	P	Q	R	R1	S	U	V	W	X	AR	AX	AY
16	M16×1.5	14	6	12	14	14	9	24	6	5	M5	6	25	22
20	M22×1.5	10	8	16	19	10	12	29	8	6	G1/8"	7	33	29
25	M22×1.5	1	8	16	19	12	12	34	10	8	G1/8"	7	33	29
32	M24×2.0	12	10	16	25	12	15	39.5	12	10	G1/8"	8	37	32
40	M30×2.0	12	12	20	25	12	15	49.5	16	14	G1/4"	9	37	41

Overall Dimensions

MSAL

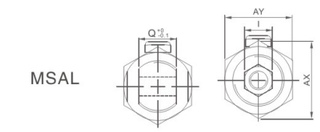

MSAL-CM

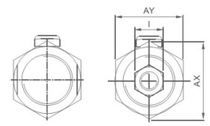

MSAL-CM

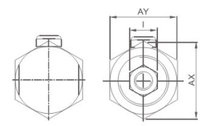

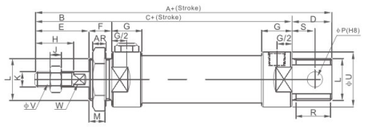

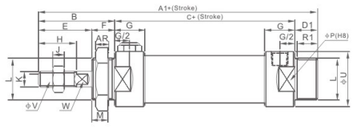

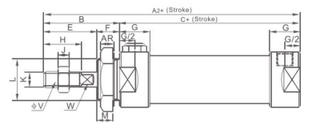

Dimension Sheet

Symbol	A		A1		A2		B	C		D	D1	E	F	G	H	I	J
Bore/Stroke	0-50	51-100	0-50	51-100	0-50	51-100		0-50	51-100								
20	131	156	122	147	110	135	40	70	95	21	12	28	12	16	20	12	6
25	135	160	160	153	114	139	44	70	95	21	14	30	14	16	22	17	6
32	141	166	166	153	114	139	44	70	95	27	14	30	14	16	22	17	6
40	165	190	190	177	138	163	46	92	117	27	14	32	14	22	24	17	7

Inside Diameter/Symbol	K	L	M	P	Q	R	R1	S	U	V	W	X	AR	AX	AY
20	M8×1.25	M22×1.5	10	8	16	19	10	12	29	8	6	G1/8"	7	33	29
25	M10×1.25	M22×1.5	12	8	16	19	12	12	34	10	8	G1/8"	7	33	29
32	M10×1.25	M24×2.0	12	10	16	25	12	15	39.5	12	10	G1/8"	8	37	32
40	M12×1.25	M30×2.0	12	12	20	25	12	15	49.5	16	14	G1/4"	9	47	41

Overall Dimensions

MALD

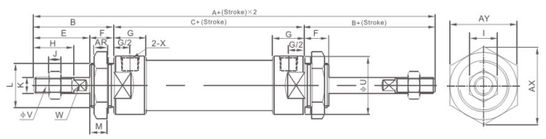

MALJ

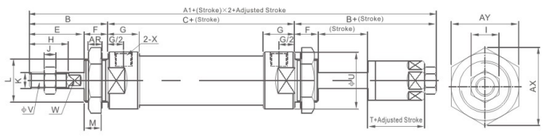

Dimension Sheet

Inside Diameter/Symbol	A	A1	B	C	E	F	G	H	I	I	K
20	150	147	40	70	28	12	16	20	12	6	M8×1.25
25	158	155	44	70	30	14	16	22	17	6	M10×1.25
32	158	155	44	70	30	14	16	22	17	6	M10×1.25
40	184	180	46	92	32	14	22	24	17	7	M12×1.25

Inside Diameter/Symbol	L	M	U	V	W	X	AR	AX	AY	T
20	M22×1.5	10	29	8	6	G1/8"	7	33	29	19
25	M22×1.5	12	34	10	8	G1/8"	7	33	29	21
32	M24×1.5	12	39.5	12	10	G1/8"	8	37	32	21
40	M30×2.0	12	49.5	16	14	G1/4"	9	47	41	21

CM2 Series Stainless Steel mini Cylinder

Ordering Code

CM2 — 32 × 150 — A

Series Code
CM2B:Normal Type
CDM2B:Attach magnet Type

Cylinder Bore
20mm-40mm

Stroke
0~1000mm

Buffer
Blank:Rubber Buffer
A:Air Buffer



CDM2B 32×50



CDM2B 20×50

Internal structure

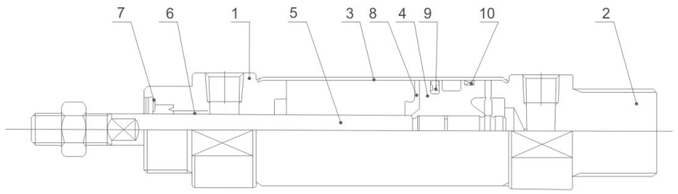

NO.	Designation	NO.	Designation
1	Front Cover	6	Oiled Bearing
2	Back Cover	7	Front Cover Seal Ring
3	Barrel	8	Anti-crash cushion
4	Piston	9	Piston Seal
5	Piston rod	10	Wear Ring

Specifcation

Bore(mm)	20	25	32	40
Working Medium	Air			
Motion Pattern	Double action			
Ensured Pressure Resistance	15.3kgf/cm²(1.5Mpa)			
Max.pressure	10.2kgf/cm²(1.0Mpa)			
Min.pressure	0.5kgf/cm²(0.05Mpa)			
Operating Temperature Range	-10~+70℃			
Operating Speed Range	50~750mm/s			
Buffering	Rubber buffer(Standard),Air buffer(Optional)			
Margin of Stroke Error(mm)	+1.4 0mm			
Port size	G1/8"	G1/8"	G1/8"	G1/4"

Overall Dimensions

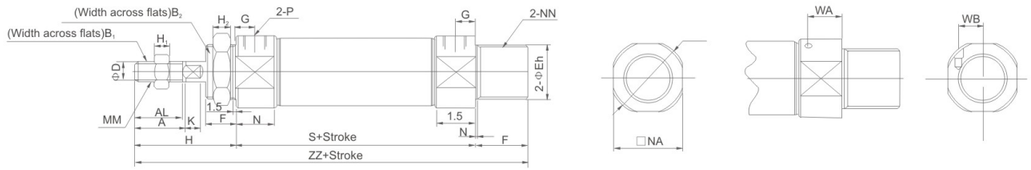

Dimension Sheet

Diameter	Stroke range	A	AL	B1	B2	D	E	F	G	H	H1	H2	I	K	MM	N	NA	NN	P	S	ZZ	WA	WB
20	~300	18	15.5	13	26	8	20 0 -0.033	13	8	41	5	8	28	5	M8×1.25	15	24	M20×1.5	1/8	62	116	11.5	8.5
25	~300	22	19.5	17	32	10	26 0 -0.033	13	8	45	6	8	33.5	5.5	M10×1.25	15	30	M26×1.5	1/8	62	120	11.5	10
32	~300	22	19.5	17	32	12	26 0 -0.033	13	8	45	6	8	37.5	5.5	M10×1.25	15	34.5	M26×1.5	1/8	64	122	11.5	11.5
40	~300	24	21	22	41	14	32 0 -0.033	16	11	50	6	10	46.5	7	M14×1.5	21.5	42.5	M32×2	1/4	88	154	14	15

CJ2 Series Stainless Steel mini Cylinder

Ordering Code

CJ2 — 16 × 50 — S — □

Series Code
CJ2B:Normal Type
CDJ2B:Attach Magnet Type

Cylinder Bore
6mm-16mm

Stroke
0~200mm

Action
S: Single action (with spring return)
T: Single action (with spring extent)

The type of air hole on the head cover end

Mark \ Bore	Φ6	Φ10	Φ16
Blank	-	Vertical	
R	Horizontal		



CJ2B 16×50



CJ2B 6×25

Specifcation

Bore(mm)	6	10	16
Working Medium	Air		
Motion Pattern	Double action/Single Action Extrusion type/Single Action Drawing-in Type		
Ensured Pressure Resistance	1.05Mpa(10.5kgf/cm²)		
Max.pressure	0.7Mpa(7.1kgf/cm²)		
Min.pressure	0.25Mpa(2.5kgf/cm²)	0.15Mpa(1.5kgf/cm²)	
Operating Temperature Range	-10~+70℃		
Operating Speed Range	50~750mm/s		
Buffering	Both side Rubber buffer(Standard)		
Margin of Stroke Error(mm)	+1.0 0 mm		
Port size	M5×0.8		

Overall Dimensions

Normal Type

CJ2B6

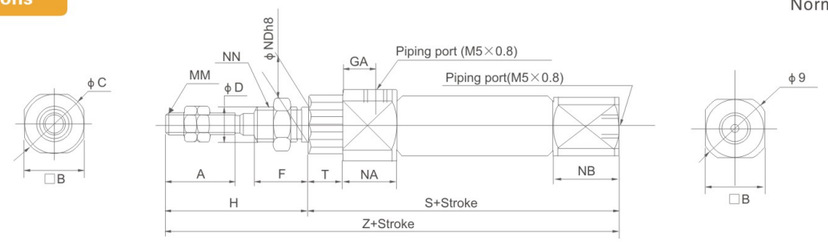

CJ2B10/16

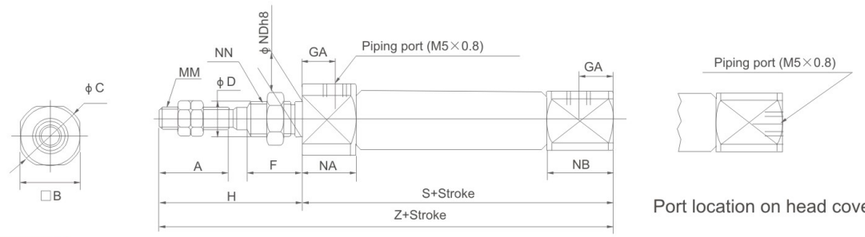

Port location on head cover:

Dimension Sheet

Bore(mm)	A	B	C	D	F	GA	GB	H	MM	NA	NB	NDh8	NN	S	T	Z
6	15	12	14	3	8	14.5	-	28	M3×0.5	16	7	6	M6×1.0	49	3	77
10	15	12	14	4	8	8	5	28	M4×0.7	12.5	9.5	8	M8×1.0	46	-	74
16	15	18	20	5	8	8	5	28	M5×0.8	12.5	9.5	10	M10×1.0	47	-	75

Overall Dimensions

Normal Type:Spring return CJ2B–CDJ2B

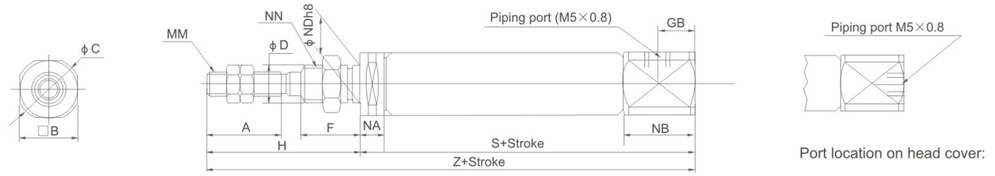

Port location on head cover:

Dimension Sheet

Bore (mm)	A	B	C	D	F	GB	H	MM	NA	NB	NB b8	*S 5~15	*S 16~30	*S 31~45	*S 46~60	*S 61~75	*S 76~100	*S 101~125	*S 126~150	*Z 5~15	*Z 16~30	*Z 31~45	*Z 46~60	*Z 61~75	*Z 76~100	*Z 101~125	*Z 126~150
6	15	8	19	3	8	-	28	M3×0.5	3	7	$6^{0}_{-0.018}$	34.5 (39.5)	43.5 (48.5)	47.5 (52.5)	61.5 (66.5)	-	-	-	-	62.5 (67.5)	71.5 (76.5)	75.5 (80.5)	89.5 (94.5)	-	-	-	-
10	15	12	14	4	8	5	28	M4×0.7	5.5	9.5	$8^{0}_{-0.022}$	45.5	53	65	77	-	-	-	-	73.5	81	93	105	-	-	-	-
16	15	18	20	5	8	5	28	M5×0.8	5.5	9.5	$10^{0}_{-0.022}$	45.5	54	66	78	84	108	126	138	73.5	82	94	106	112	136	154	166

※ Attach Magnet size

Overall Dimensions

Normal Type:Spring extent CJ2B–CDJ2B

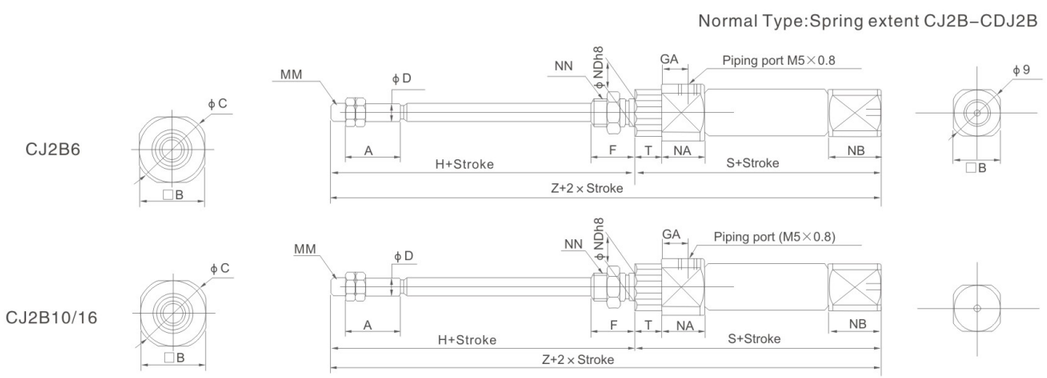

Dimension Sheet

Bore (mm)	A	B	C	D	F	GA	H	MM	NN	NA	NB	NB b8	T	*S 5~15	*S 16~30	*S 31~45	*S 46~60	*S 61~75	*S 76~100	*S 101~125	*S 126~150	*Z 5~15	*Z 16~30	*Z 31~45	*Z 46~60	*Z 61~75	*Z 76~100	*Z 101~125	*Z 126~150
6	15	8	14	3	8	14.5	28	M3×0.5	M6×1	16	3	$6^{0}_{-0.018}$	3	46.5 (51.5)	55.5 (60.5)	59.5 (60.5)	73.5 (78.5)	-	-	-	-	74.5 (79.5)	83.5 (88.5)	87.5 (92.5)	101.5 (106.5)	-	-	-	-
10	15	12	14	4	8	8	28	M4×0.7	M8×1	12.5	5.5	$8^{0}_{-0.022}$	-	48.5	56	68	80	-	-	-	-	76.5	84	96	108	-	-	-	-
16	15	18	20	5	8	8	28	M5×0.8	M10×1	12.5	5.5	$10^{0}_{-0.022}$	-	48.5	57	69	81	87	111	129	141	76.5	85	97	109	115	139	157	169

※ Attach Magnet size

Ordering Code



ADVU 40×50–S

ADVU — **50** × **80** — **S** — **B**

Serise Code
ADVU:Double Action Type
AEVUZ:Single-Action type
ADVUD:Double-shaft Double Action Type

Cylinder Bore
16mm-100mm

Stroke
Normal Type:
16-25:1-200mm
32-63:1-300mm
80-100:1-400mm
Single Action:
16-100:1-25mm

Magnet Code
Blank:Without Magnet
S:With Magnet

Cog Type
Blank:Inner Thread
B:Outer Thread

Specifcation

Bore(mm)		16	20	25	32	40	50	63	80	100
Action		Double Acting, single rod/double rod								
Working Medium		Air								
Ensured Pressure Resistance		1.5MPa								
Operating pressure range	ADVU - -P-A	0.12~1.0MPa	0.1~1.0MPa	0.08~1.0MPa				0.06~1.0MPa		
	ADVU - -P-A-S2	0.13~1.0MPa	0.12~1.0MPa	0.1~1.0MPa				0.8~1.0MPa		
Ambient and fluid temperature		-20~80 (No freezing)								
Port size		M5			G1/8"					G1/4"
Piston rod thread	Female thread	M4	M5		M6		M8		M10	M12
	Male thread	M8	M10×1.25				M12×1.25		M16×1.5	M20×1.5
Cushion		Rubber bumper								

ADVU□–□–P–A /Series

Overall Dimensions

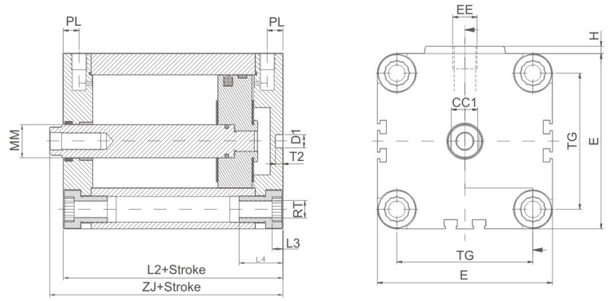

■ Note
To attach cylinder. 12 and 16mm from above, use only 2 screwsdiagonally or non-magnetic screws.
+= plus stroke length
2 Minimum screw-in depth

Dimension Sheet

Bore size(mm)	D1	E	EE	H	L2	L3	L4	MM	PL	RT	T2	TG	ZJ	CC1
16	6	29	M5	1	38	4	18.5	8	8	M4	4	18	44	6
20	6	36	M5	1.5	38	4	18.5	10	8	M5	4	22	43.5	8
25	6	40	M5	1.5	39.5	4	18.5	10	8	M5	4	26	46	8
32	6	50	G1/8	2	44.5	5	22	12	8	M6	4	32	51.5	10
40	6	60	G1/8	2.5	45.5	5	22	12	8	M6	4	42	52	10
50	6	68	G1/8	2.8	46.5	5	22	16	8	M8	4	50	54.5	14
63	8	88	G1/8	4	50	6	26	16	8	M10	4	62	56	14
80	8	107	G1/8	4	56	6	26	20	8.5	M10	4	82	62	17
100	8	128	G1/4	5	66.5	8	26	20	10.5	M10	4	103	76.5	22

■ Note:ADVU Series Cylinder With 100mm Bore Is Being Developed, Not Available At The Moment.

Ordering Code

SDA	20	×	30	—	5	—	S	—	B
Serise Code	Cylinder Bore		Stroke		Adjust Stroke		Magnet Code		Cog Type

Serise Code
SDA: Double Action Type
SSA: Single Action Extrusion Type
STA: Single Action Drawing-in Type
SDAD: Double-shalf Double Action Type
SDAJ:Double-shalf and Adjustable Stroke Type

Cylinder Bore
12mm~100mm

Stroke

Adjust Stroke
5mm
15mm
25mm

Magnet Code
Blank:Without Magnet
S:With Magnet

Cog Type
Blank:Inner Thread
B:Outer Thread
N:No Thread



SDA 32×25

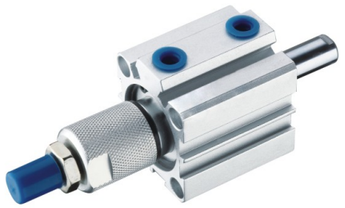

SDAJ 32×25–10

Internal structure

SDA Type

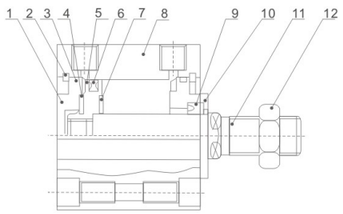

NO	Designation	NO	Designation
1	Back cover	2	Type C buckle ring
3	O-ring	4	Anti-crash cushion
5	Piston	6	Piston O-ring
7	Anti-crash cushion	8	Barrel
9	Front cover seal ring	10	Front cover
11	Piston rod	12	Piston Rod Nut

SSA Type

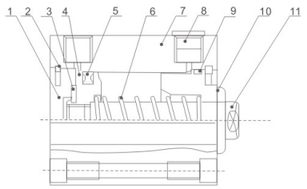

NO	Designation	NO	Designation
1	Back cover	2	Type C buckle ring
3	Anti-crash cushion	4	Piston
5	Piston O-ring	6	Compressed spring
7	Barrel	8	Silencer
9	Cover O-ring	10	Front cover
11	Piston rod		

STA Type

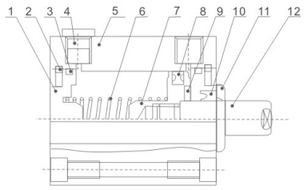

NO	Designation	NO	Designation
1	Back cover	2	Type C buckle ring
3	Cover O-ring	4	Silencer
5	Barrel	6	Compressed spring
7	Piston	8	Piston O-ring
9	Anti-crash cushion	10	Frount cover sealring
11	Front cover	12	Piston rod

Specifcation

Bore(mm)		12	16	20	25	32	40	50	63	80	100
Motion Pattern		Double Acting									
		Single Acting Extrusion type Single Acting Drawing-in Type						-			
Working Medium		Air									
Operating Pressure Range	Double Action	0.1~0.9MPa									
	Single Action	0.2~0.9MPa						-			
Ensured Pressure Resistance		1.35MPa									
Operating Temperature Range		-5~70℃									
Operating Speed Range	Double Action	30~500mm/s						30~350mm/s		30~250mm/s	
	Single Action	100~500mm/s						-			
Buffer Type		Fixed Type Buffer									
Port Size		M5×0.8				G1/8"		G1/4"		G3/8"	

Stroke

Bore(mm)		12	16	20	25		32	40	50	63	80	100
Double Action	Not attach magnet	5~60 mm Every 5mm is grouped as one grade		5~85 mm Every 5mm is grouped as one grade	5~90 mm Every 5mm is grouped as one grade	100~110 mm Every 5mm is grouped as one grade	5~90 mm Every 5mm is grouped as one grade			100~130 mm Every 5mm is grouped as one grade		
	Attach magnet	5~50 mm Every 5mm is grouped as one grade		5~75mm Every 5mm is grouped as one grade	5~90 mm Every 5mm is grouped as one grade	100mm	5~90 mm Every 5mm is grouped as one grade			100~120 mm Every 5mm is grouped as one grade		
Single Action	Not attach magnet	5~30 mm Every 5mm is grouped as one grade					5~30 mm Every 5mm is grouped as one grade			-		
	Attach magnet	5~30 mm Every 5mm is grouped as one grade					5~30 mm Every 5mm is grouped as one grade			-		
Max.Stroke		60mm		100mm		120mm			130mm			

Outer Thread Dimension

ϕ12~ϕ16

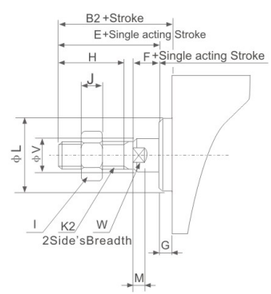

ϕ20~ϕ100

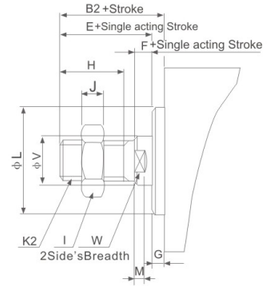

Dimension Sheet

Bore/Symbol	B2	E	F	G	H	I	J	K2	L	M	V	W
12	17	16	4	1	10	8	4	M5×0.8	10.2	2.8	6	5
16	17.5	16	4	1.5	10	8	4	M5×0.8	11	2.8	6	5
20	20.5	19	4	1.5	13	10	5	M6×1.0	16	2.8	8	6
25	23	21	4	2	15	12	6	M10×1.5	17	2.8	10	8
32	25	22	4	3	15	17	6	M14×1.5	22	2.8	12	10
40	35	32	4	3	25	19	8	M18×1.5	28	2.8	16	14
50	37	33	5	4	25	27	11	M18×1.5	38	2.8	20	17
63	37	33	5	4	25	27	11	M22×1.5	40	2.8	20	17
80	44	39	6	5	30	32	13	M22×1.5	45	4	25	22
100	50	45	7	5	35	36	13	M26×1.5	55	4	32	27

Overall Dimensions

SDA.SDAS Type
ϕ12–ϕ16

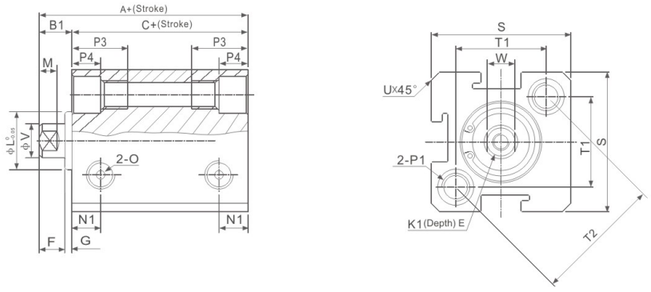

SDA.SDAS Type
ϕ20–ϕ100

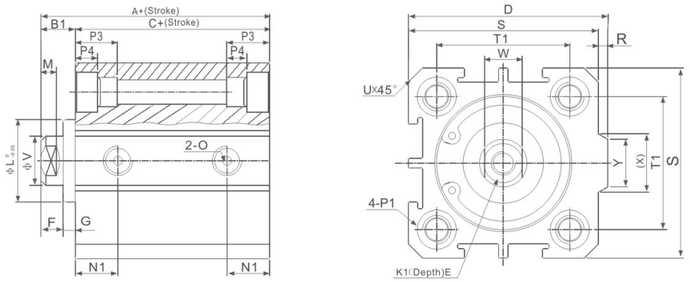

Dimension Sheet

Type	Standard type			Attach Magnet			D	E		F	G	K1	L	M	N1
Bore Size/Symbol	A	B1	C	A	B1	C		Stroke≤10	Stroke>10						
12	22	5	17	32	5	27	-	6		4	1	M3×0.5	10.2	2.8	6.3
16	24	5.5	18.5	34	5.5	28.5	-	6		4	1.5	M3×0.5	11	2.8	7.3
20	25	5.5	19.5	35	5.5	29.5	36	8		4	1.5	M4×0.7	15	2.8	7.5
25	27	6	21	37	6	31	42	10		4	2	M5×0.8	17	2.8	8
32	31.5	7	24.5	41.5	7	34.5	50	12		4	3	M6×1	22	2.8	9
40	33	7	28	43	7	36	58.5	12		4	3	M8×1.25	28	2.8	10
50	37	9	28	47	9	38	71.5	15		5	4	M10×1.5	38	2.8	10.5
63	41	9	32	51	9	42	84.5	15		5	4	M10×1.5	40	2.8	11.8
80	52	11	41	62	11	51	104	15	20	6	5	M14×1.5	45	4	14.5
100	63	12	51	73	12	61	124	18	20	7	5	M18×1.5	55	4	20.5

Bore Size/Symbol	N3	O	P1	P3	P4	R	S	T1	T2	U	V	W	X	Y
12	6	M5×0.8	Double Sides:Φ6.5/Thread:M5×0.8/Through ports:Φ4.2	12	4.5	-	25	16.2	23	1.6	6	5	-	-
16	6.5	M5×0.8	Double Sides:Φ6.5/Thread:M5×0.8/Through ports:Φ4.2	12	4.5	-	29	19.8	28	1.6	6	5	-	-
20	-	M5×0.8	Double Sides:Φ6.5/Thread:M5×0.8/Through ports:Φ4.2	14	4.5	2	34	24	-	2.1	8	6	11.3	10
25	-	M5×0.8	Double Sides:Φ8.2/Thread:M6×1.0/Through ports:Φ4.6	15	5.5	2	40	28	-	3.1	10	8	12	10
32	-	G1/8"	Double Sides:Φ8.2/Thread:M6×1.0/Through ports:Φ4.6	16	5.5	6	44	34	-	2.15	12	10	18.3	15
40	-	G1/8"	Double Sides:Φ10/Thread:M8×1.25/Through ports:Φ6.5	20	7.5	6.5	52	40	-	2.25	16	14	21.3	16
50	-	G1/4"	Double Sides:Φ11/Thread:M8×1.25/Through ports:Φ6.5	25	8.5	9.5	62	48	-	4.15	20	17	30	20
63	-	G1/4"	Double Sides:Φ11/Thread:M8×1.25/Through ports:Φ6.5	25	8.5	9.5	75	60	-	3.15	20	17	28.7	20
80	-	G3/8"	Double Sides:Φ14/Thread:M12×1.75/Through ports:Φ9.2	25	10.5	10	94	74	-	3.65	25	22	36	26
100	-	G3/8"	Double Sides:Φ17.5/Thread:M14×2/Through ports:Φ11.3	30	13	10	114	90	-	3.65	32	27	35	26

Ordering Code



CJPB 10×15

CJP — 10 × 5 — B

Series Code
CJPB:Panel Mount Type
CJPS:Invisible Type
CJPD:Double Action

Cylinder Bore
6mm
10mm
15mm

Stroke
0~30mm

Thread Type
Blank:With Thread
B:No. Thread

Specifcation

Bore(mm)	6	10	15
Working Medium	Air		
Motion Pattern	Double action / Single Action(Drawing-in Type)		
Ensured Pressure Resistance	10.5kgf/cm²(1.05Mpa)		
Max.pressure	7kgf/cm²(0.7Mpa)		
Min.pressure	2kgf/cm²(0.2Mpa)	1.5kgf/cm²(0.15Mpa)	
Operating Temperature Range	5~+60℃		
Buffering	NO		
Margin of Stroke Error(mm)	$^{+1.0}_{0}$		
Port size	M5×0.8 Panel mount Type		

Overall Dimensions

Panel Mounting Style
CJPB

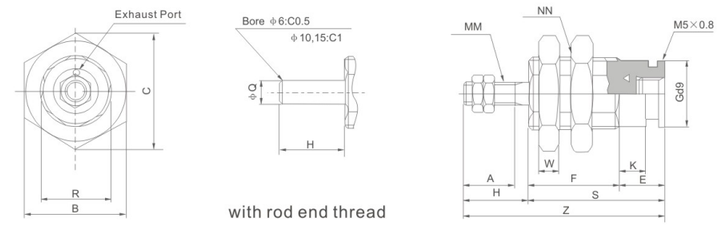

with rod end thread

Dimension Sheet

St=(Stroke) mm

Bore(mm)	A	B	C	E	F			ϕG	H	K	MM	NN	R	S			W	Z			Q
					5st	10st	15st							5st	10st	15st		5st	10st	15st	
6	7	12	13.9	6	12.5	19.5	26.5	8.5	9	3.5	M3×0.5	M10×1.0	9	18.5	22.5	32.5	3	27.5	34.5	41.5	3
10	10	19	22	6	14.5	21	28	12	12	3.5	M4×0.7	M15×1.5	13	20.5	27	34	4	32.5	39	46	5
15	12	27	31	7	16.5	22.5	29	19	14	4.2	M5×0.8	M22×1.5	20	23.5	29.5	36	5	37.5	43.5	50	6

Overall Dimensions

(Plug Mounting Style)
CJPS

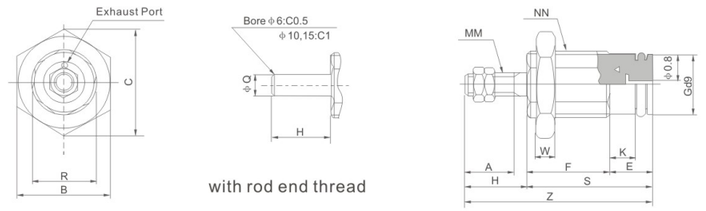

with rod end thread

Dimension Sheet

Bore(mm)	A	B	C	E	F			ϕG	H	K	MM	NN	R	S			W	Z			Q
					5st	10st	15st							5st	10st	15st		5st	10st	15st	
6	7	12	13.9	6	12.5	19.5	26.5	8.5	9	3.5	M3×0.5	M10×1.0	9	18.5	22.5	32.5	3	27.5	34.5	41.5	3
10	10	19	22	6	14.5	21	28	12	12	3.5	M4×0.7	M15×1.5	13	20.5	27	34	4	32.5	39	46	5
15	12	27	31	7	16.5	22.5	29	19	14	4.2	M5×0.8	M22×1.5	20	23.5	29.5	36	5	37.5	43.5	50	6

Ordering Code

TN | 20 | × | 50 | — | S

Series Code
Double-Shaft
Double Action Type

Cylinder Bore
10mm
16mm
20mm
25mm
32mm

Stroke

Magnet Code
Blank:Without Magnet
S:Attach Magnet

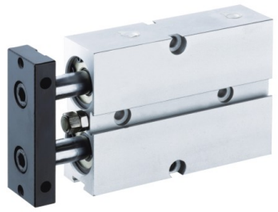

TN 20×25

Specifcation

Bore(mm)	10	16	20	25	32
Motion Pattern	Double action				
Working Medium	Air				
Operating Pressure Range	1~9kgf/cm²				
Ensured Pressure Resistance	10.5kgf/cm²				
Operating Temperature Range	-5~+70℃				
Operating Speed Range	100~500mm/s				
Adjustable Stroke	-10~0mm				
Cushion Type	Adjustable Cushion				
Non-rotating Precision	0.4℃		0.3℃		
Port Size	M5×0.8				G1/8"

Overall Dimensions

ϕ10

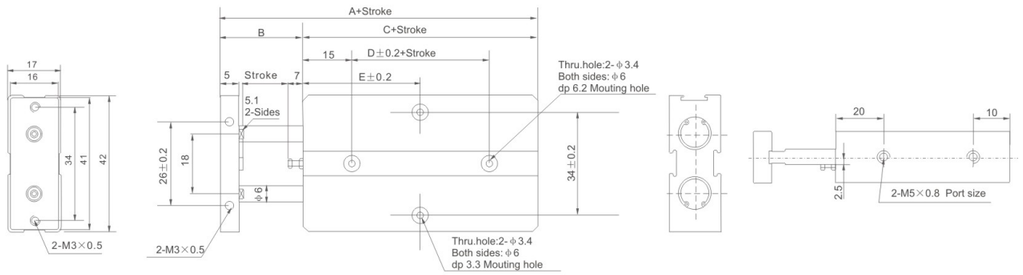

Dimension Sheet

Bore size / Item	A	B	C	D	E						
					10	20	30	40	50	60	70
10	63	12	51	10	30	30	35	40	45	50	55

Overall Dimensions

ϕ16~ϕ25

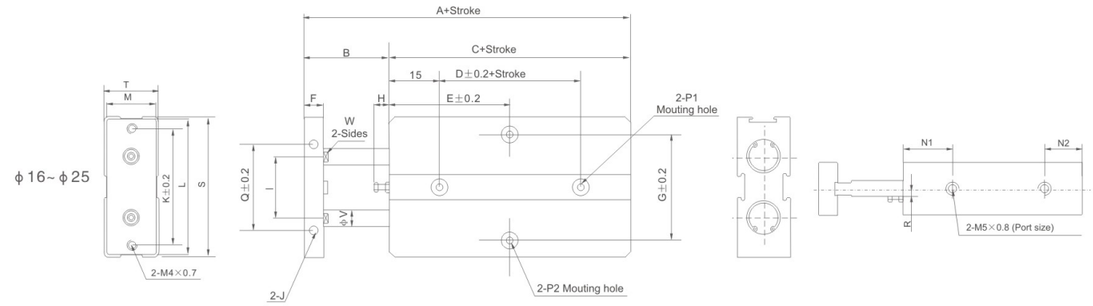

Dimension Sheet

Bore size / Item	A	B	C	D	E												F	G	H	I
					10	20	30	40	50	60	70	80	90	100	125	150				
16	68	15	53	20	30	35	40	45	50	55	60	65	70	75	87.5	100	8	47	6	24
20	78	20	58	20	35	35	40	45	50	55	60	65	70	75	87.5	100	10	55	9	28
25	81	19	62	30	40	40	45	50	55	60	65	70	75	80	92.5	105	10	66	8	34

Bore size/Item	J	K	L	M	N1	N2	P1	P2	Q	R	S	T	V	W
16	M4×0.7/dp 5	47	53	20	22	11	Both sides : ϕ7.5(dp) 7.2mm Thru.hole: ϕ4.5	Both sides: ϕ8(dp) 4.4mm Thru.hole: ϕ4.5	34	3	54	21	8	6.1
20	M4×0.7/dp 5	55	61	24	25	12	Both sides: ϕ7.5(dp) 7.2mm Thru.hole: ϕ4.5	Both sides: ϕ8(dp) 4.4mm Thru.hole: ϕ4.5	44	3.5	62	25	10	8.1
25	M4×0.7/dp 6	66	72	29	27	12	Both sides: ϕ7.5(dp) 7.2mm Thru.hole: ϕ4.5	Both sides: ϕ8(dp) 4.4mm Thru.hole: ϕ4.5	56	7	73	30	12	10.2

Overall Dimensions

ϕ32

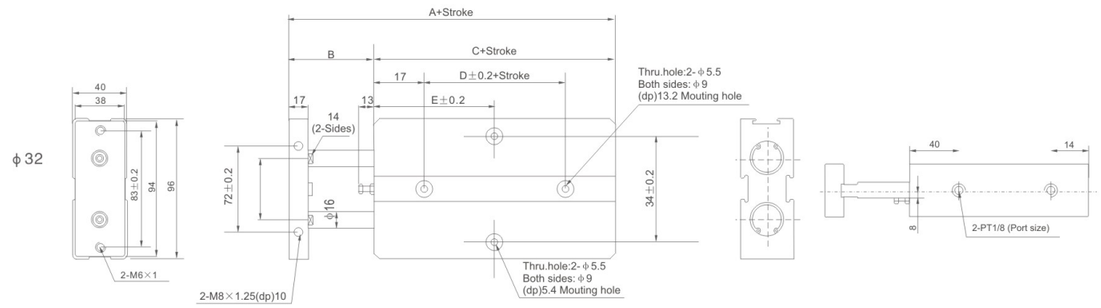

Dimension Sheet

Bore size / Item	A	B	C	D	E											
					10	20	30	40	50	60	70	80	90	100	125	150
32	108	30	78	35	45	50	55	60	65	70	75	80	85	90	102.5	115

ISO Standard Cylinder Accessories



ISO–LB Type Foot Bracket

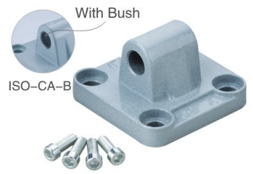

ISO–CA Type Single Earring



ISO–CB+Pin Type Double Earring



ISO–SDB Type

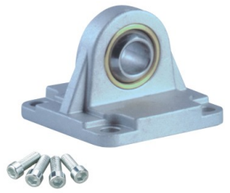

ISO–RB Type



ISO–FA/FB Type Flange

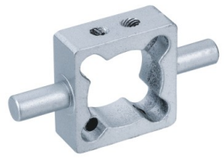

ISO–SI–TC

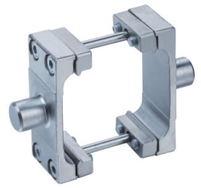

ISO–DNC–TC



ISO–Y+Pin ISO–Y+Clip



ISO–I Joint



ISO–UJ Type Float Joint



ISO–PHS Type Fish Eye Joint

Standard Cylinder Accessories



LB Type Foot Bracket



FA/FB Type Flange



CA Type Single Earring



CB +Pin Type Double Earring



Y+Pin Type Joint



I Type Joint



TC Type



TC–M Type

Mini Cylinder Accessories



M–FA Type Flange



M–FA–A Type

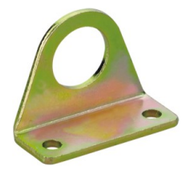

M–LB Type Foot Bracket



M–SDB Type Bracket



M–Y+Pin M–Y+Clip



M–I Joint



M–UJ Type Float Joint



M–PHS Type Fish Eye Joint



M–U+Pin

Special cylinder accessories









- Our company can customize all kinds of non-standard cylinder accessories acco-rding to your drawing or sample.

Seal Kits for Pneumatic Cylinder

Seal kits-DNC



Seal kits-DNC-Viton



DNC Series Cylinder Kits



SI Series Cylinder Kits

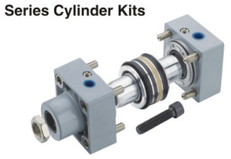

SC Series Cylinder Kits



MA/MA6432 Series Cylinder Kits



MAL Series Cylinder Kits



SDA Series Cylinder Kits



MB Kits(Japan Standard)

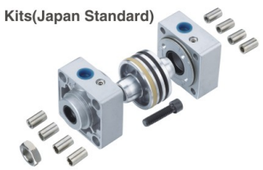

ADVU Kits(ISO6431)



DNG Kits(ISO15552)



Tube and piston rod for pneumatic cylinder

SC,MAL



DNC



SI



SI,DNC

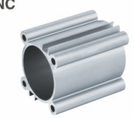

SDA



ADVU



MA,MA6432



Piston rod



Magnetism Switch

XC-03 Series



XC-03 Series



XC-21R Series

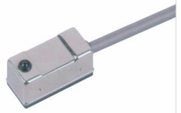

XC-31R Series



XC-11R Series



XC-01R Series



XC-07R Series



XC-15R Series



XC-20R Series



XC-36R Series



BK Series Clamp

Product	Dimension

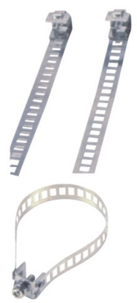

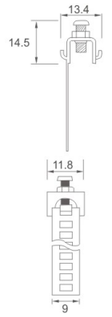

BK-81:For round cylind cylinder and tie-rod cylinder ϕ6-ϕ63.

BK-82:For round cylind cylinder and tie-rod cylinder ϕ6-ϕ125.(Speed design for≥ ϕ125)

PBN Series Clamp

Product	Dimension



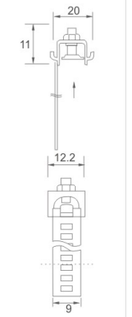

BK-81:For round cylind cylinder and tie-rod cylinder ϕ6-ϕ63.

BK-82:For round cylind cylinder and tie-rod cylinder ϕ6-ϕ125.(Speed design for≥ ϕ125)

PN Series Clamp

Product	Dimension



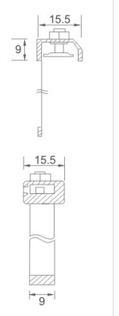

PI Series Bracket

PI-1(32/40)/PI-2(50/63)



PI Series Bracket

PI-3(80)/PI-4(100)



PI Series Bracket

PI-5(125)/PI-6(160)



PI Series Bracket

PI-7(200)



PAC Series Bracket



PM Series Bracket

PM-6(32/40/50) PM-8(63) PM-10(80/100)
PM-12(125) PM-16(160/200)



SU Series Bracket

SU-32/SU-40



SU Series Bracket

SU-50/SU-63

SU Series Bracket

SU-80/SU-100

SU Series Bracket

SU-125/SU-160

SU Series Bracket

SU-200

HAC Series Shock Absorbers

Ordering Code

HAC — 25 50 — 2 N

Series Code
HAC:Multi Non-Adjustable Type
HACD: Double Direction Cushion Type

Outside Diameter

Stroke

Impact speed
1. High Impact Speed
2. Medium Impact Speed
3. Low Impact Speed

Buffer cap
Blank:with buffer cap
N:Without buffer cap



HAC2020–2



HAC2525–2



HACD2035

Specifcation

Model	Stroke	Max.Absorbing Energy (NM)	Max.Absorb. Energy/Hour (NM)	Max.Effective Mass(kg)			Max.Impact Speed (m/s)		
				1	2	3	1	2	3
HAC-0806	6	2	7200	0.5	2	6	2	1	0.5
HAC-1005	5	3	10800	1	3	7	3	1.5	0.8
HAC-1008	8	4	14400	2	4	9	3	1.5	0.8
HAC-1210	10	5	18000	5	10	30	2	1.5	0.8
HAC-1412	12	15	36000	8	50	100	3	1.5	0.8
HAC-1416	16	20	40000	10	70	150	3	1.5	0.8
HAC-1425	25	25	48000	12	80	160	3	1.5	0.8
HAC-2020	20	40	48000	30	200	700	3.5	2	1
HAC-2030	30	50	54000	30	200	700	3.5	2	1
HAC-2050	50	60	66000	60	400	1200	3.5	2	1
HAC-2525	25	80	60000	200	600	1200	4	2.5	1
HAC-2540	40	120	84000	300	800	2000	4	2.5	1
HAC-2550	50	98	98000	15	40	160	4	2.5	1
HAC-2580	80	150	127500	20	50	200	4	2.5	1
HAC-3660	60	250	125000	400	1500	2400	4	2.5	1
HACD-2030	30	45	54000	40	300	900	3.5	2	1
HACD-2050	35	52	64400	40	200	650	3.5	2	1

■ Working Temperature: -10~85℃

HAD Series Shock Absorbers

Ordering Code

HAD — 25 25 1 □

Series Code
HAD:Adjustable Series

Outside Diameter

Stroke

Impact speed
1:High impact speed
2:Medium impact speed
3:Low impact speed

Buffer cap
Blank:with buffer cap
N:Without buffer cap



HAD2025



HAD2540

Specifcation

Model	Stroke	Max.Absorbing Energy Per Cycle(Nm)	Max.Absorbing Energy/Hour(Nm/hr)	Max Effective Mass(kg)	Max Impact speed(m/s)
HAD-1410	10	20	24000	80	3.2
HAD-2016N/2016	16	25	32000	200	3.6
HAD2050-N/2050	25	39	39000	312	3.6
HAD2525-N/2525	25	85	51000	400	3.6
HAD2540	40	100	84000	700	3.6
HAD2550	50	98	98000	720	4.2
HAD3625	25	150	9000	1400	3.2
HAD3650	50	300	108000	1400	4.8
HAD4225	25	260	130000	3000	3.6
HAD4250	50	500	155000	4000	4.8
HAD4275	75	750	187500	6000	4.8
HAD64050	50	12000	1560000	12727	1.6
HAD64100	100	24000	1920000	18181	1.6
HAD64150	150	36000	2520000	23636	1.6

■ Working Temperature: –10~+85℃

HR Series Speed Regalator



HR30

Ordering Code

HR — 30

Series Code
HR:Adjustable oil speed regulator

Max.Stroke
15:15mm
30:30mm
60:60mm
80:80mm
100:100mm

Specifcation

Model	A	B	Max.stroke(mm)	Maximum load(kgf)
HR15	157	142	15	350
HR30	208	178	30	350
HR60	286	225	60	350
HR80	342	262	80	350
HR100	396	296	100	350

■ Working Temperature: –10~+85℃

Pneumatic Tube Fittings

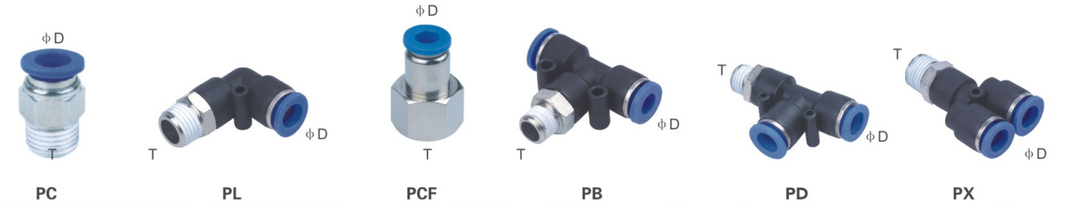

PC PL PCF PB PD PX



PKB PH PMF PP PM PZA



PKG PK PLM PU PV PE



PY PG PGE PEG PW

Pneumatic Tube Fittings With G Thread(o-ring)



PD–G PLH–G PLL–G

Speed Controls

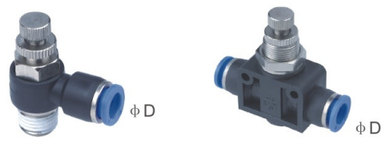

JSC PA

Hand Valve/Ball Valve



HVFF HVSF

Silencer



B Type Muffler | V Type Muffler | XB Type Exhaust Muffling Throttle Valve | SC Type Muffler | SEB Type Muffler | SET Type Muffler Coppler Plating Feet | SCQ Type Muffler | D Type Muffler



C Type Exhaust Muffling Throttle Valve | SDV Type Muffler | XA Type Exhaust Muffling Throttle Valve | SD Type Muffler | SEB–B–1 Piveted And Plated The Nickel Wholly | SS–V Type Stainless Steel Muffler | SSDV Type Stainless Steel Muffler | SSM Type Muffler

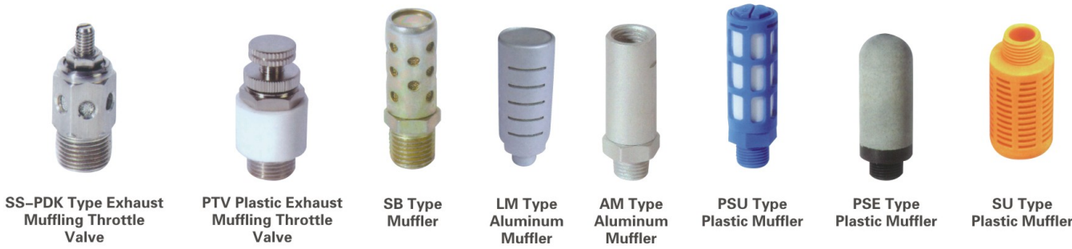

SS–PDK Type Exhaust Muffling Throttle Valve | PTV Plastic Exhaust Muffling Throttle Valve | SB Type Muffler | LM Type Aluminum Muffler | AM Type Aluminum Muffler | PSU Type Plastic Muffler | PSE Type Plastic Muffler | SU Type Plastic Muffler

Air Gun



AG-B-S AG-A-S AG-B-L AG-A-L DG-10 XAG-B-L HG-8

Tube Cutter



Polyurethane Tube

PU Tube



PUL Series Polyurethane Spiral Tube

PU Spiral Tube



Nylon Tube



PE Tube



NY Tube